TOSHIBA

CTC-E26-RES010-1

Engineering Data Book

# Residential Inverter Heat Pump R32

# SHORAI

## Indoor Units

**RAS-B25P2KVSG(B)-ND**

**RAS-B35P2KVSG(B)-ND**

**RAS-B50P2KVSG(B)-ND**

## Outdoor Units

**RAS-25P2AVSG-ND**

**RAS-35P2AVSG-ND**

**RAS-50P2AVSG-ND**

# Contents

1. Lineup .....3
2. Specifications .....4
3. Dimension .....7
4. Wiring diagram .....11
5. Refrigerant cycle diagram .....13
6. Air speed distribution .....15
7. Sound characteristics (NC Curve) .....17
8. Capacity Table .....20
9. Part load performance .....23
10. Performance characteristic .....26
11. Accessories .....29

# 1. Line up

| Indoor Unit | Outdoor Unit | Model Name | | Capacity Rank |
|---|---|---|---|---|
| | | FCU | CDU | |
|  |  | RAS-B25G3KVSG(B)-ND | RAS-25G3AVSG-ND | 10k |
| | | RAS-B35G3KVSG(B)-ND | RAS-35G3AVSG-ND | 13k |
|  |  | RAS-B50G3KVSG(B)-ND | RAS-50G3AVSG-ND | 18k |

| Accessories | | Indoor unit |
|---|---|---|
|  | Remote controller<br>White : WH-UE06UE | RAS-B25P2KVSG-ND<br>RAS-B35P2KVSG-ND<br>RAS-B50P2KVSG-ND |
| | Remote controller<br>Black : WH-UE05UE | RAS-B25P2KVSGB-ND<br>RAS-B35P2KVSGB-ND<br>RAS-B50P2KVSGB-ND |
|  | Wi-Fi built-in from factory<br>Support energy monitoring function<br><br>Application<br>Toshiba Home AC control | |

# 2. Specifications

| Model | Indoor Unit | | | RAS-B25P2KVSG(B)-ND | |
|---|---|---|---|---|---|
| | Outdoor Unit | | | RAS-25P2AVSG-ND | |
| Cooling capacity | | | (kW) | 2.80 | |
| Cooling capacity range | | | (kW) | (1.00-1.40-4.40) | |
| SEER | | | | (7.70) | |
| Heating capacity | | | (kW) | 3.20 | |
| Heating capacity range | | | (kW) | (1.00-1.60-7.40) | |
| SCOP (Average/Warmer/Colder) | | | | 5.10 | |
| Power supply | | | | 1Ph., 220V, 230V, 240V, 50Hz. | |
| Electrical characteristic | Indoor unit | Operation mode | | Cooling | Heating |
| | | Running current | (A) | 0.24(0.25-0.23) | 0.24(0.25-0.23) |
| | | Power consumption | (W) | 35 | 35 |
| | | Power factor | (%) | 64 | 64 |
| | | Indoor noise (H/L/Q) | (dB) | 42/25/19 | 45/25/19 |
| | | Indoor air flow (H/M/L) | ($m^3$/hr) | 680/500/330 | 680/500/330 |
| | Outdoor unit | Running current | (A) | 3.30 | 3.40 |
| | | Power consumption | (W) | 595 | 615 |
| | | Power factor | (%) | 82 | 82 |
| | | Outdoor noise (Rated) | (dB) | 45 | 48 |
| | | Air flow rate | ($m^3$/hr) | 1920 | 1920 |
| | Total | Rated Current | (A) | 3.40(3.55-3.25) | 3.50(3.65-3.35) |
| | | Rated power consumption | (W) | 630 | 650 |
| | | Rated power factor | (%) | 81.0 | 81.0 |
| | Maximum current (total) | | (A) | 11.80 | |
| | Maximum of power consumption | | (W) | 2480 | |
| Dimension | Indoor unit | Height | (mm) | 293 | |
| | | Width | (mm) | 822 | |
| | | Depth | (mm) | 226 | |
| | | Weight | (kg) | 11 | |
| | Outdoor unit | Height | (mm) | 550 | |
| | | Width | (mm) | 780 | |
| | | Depth | (mm) | 290 | |
| | | Weight | (kg) | 34 | |
| Refrigerant | | | | R32 | |
| Refrigerant amount | | | (kg) | 0.76 | |
| Connecting pipe | | Gas side | (mm) | 9.52 | |
| | | Liquid side | (mm) | 6.35 | |
| | | Chargeless length condition | (m) | 15 | |
| | | Maximum length | (m) | over 20 need to extra charge 20 g/m | |
| | | Maximum Height | (m) | 12 | |
| Energy label (Cooling / Heating) | | | | A++/(A+++/-/A+) | |
| Operating range | Cooling | | °C | Inside:21~32 /Outside:-15~46 | |
| | Heating | | °C | Inside:0~28 /Outside:-30~24 | |

**This specification refer to JISC9612, rated conditions.**

Cooling capacity : Inside air temperature 27˚C (Db) / 19˚C (Wb), outside air temperature 35˚C (Db) / 24˚C (Wb),

Heating capacity : Inside air temperature 20˚C (Db) / 15˚C (Wb), outside air temperature 7˚C (Db) / 6˚C (Wb),

The specification may be subject to change without notice for purpose of improvement.

| Model | Indoor Unit | | | RAS-B35P2KVSG(B)-ND | |
|---|---|---|---|---|---|
| | Outdoor Unit | | | RAS-35P2AVSG-ND | |
| Cooling capacity | | | (kW) | 3.50 | |
| Cooling capacity range | | | (kW) | (1.10-1.75-5.20) | |
| SEER | | | | (7.30) | |
| Heating capacity | | | (kW) | 4.20 | |
| Heating capacity range | | | (kW) | (1.00-2.10-7.80) | |
| SCOP (Average/Warmer/Colder) | | | | 5.10 | |
| Power supply | | | | 1Ph., 220V, 230V, 240V, 50Hz. | |
| Electrical characteristic | Indoor unit | Operation mode | | Cooling | Heating |
| | | Running current | (A) | 0.27(0.28-0.26) | 0.27(0.28-0.26) |
| | | Power consumption | (W) | 40 | 40 |
| | | Power factor | (%) | 65 | 65 |
| | | Indoor noise (H/L/Q) | (dB) | 43/25/19 | 45/25/19 |
| | | Indoor air flow (H/M/L) | ($m^3$/hr) | 720/500/330 | 720/500/330 |
| | Outdoor unit | Running current | (A) | 4.27 | 4.57 |
| | | Power consumption | (W) | 810 | 880 |
| | | Power factor | (%) | 86 | 88 |
| | | Outdoor noise (Rated) | (dB) | 47 | 48 |
| | | Air flow rate | ($m^3$/hr) | 1920 | 1920 |
| | Total | Rated Current | (A) | 4.35(4.55-4.17) | 4.65(4.85-4.45) |
| | | Rated power consumption | (W) | 850 | 920 |
| | | Rated power factor | (%) | 85.0 | 86.0 |
| | Maximum current (total) | | (A) | 11.85 | |
| | Maximum of power consumption | | (W) | 2560 | |
| Dimension | Indoor unit | Height | (mm) | 293 | |
| | | Width | (mm) | 822 | |
| | | Depth | (mm) | 226 | |
| | | Weight | (kg) | 11 | |
| | Outdoor unit | Height | (mm) | 550 | |
| | | Width | (mm) | 780 | |
| | | Depth | (mm) | 290 | |
| | | Weight | (kg) | 34 | |
| Refrigerant | | | | R32 | |
| Refrigerant amount | | | (kg) | 0.76 | |
| Connecting pipe | | Gas side | (mm) | 9.52 | |
| | | Liquid side | (mm) | 6.35 | |
| | | Chargeless length condition | (m) | 15 | |
| | | Maximum length | (m) | over 20 need to extra charge 20 g/m | |
| | | Maximum Height | (m) | 12 | |
| Energy label (Cooling / Heating) | | | | A++/(A+++/-/A+) | |
| Operating range | Cooling | | ℃ | Inside:21~32 /Outside:-15~46 | |
| | Heating | | ℃ | Inside:0~28 /Outside:-30~24 | |

**This specification refer to JISC9612, rated conditions.**

Cooling capacity : Inside air temperature 27˚C (Db) / 19˚C (Wb), outside air temperature 35˚C (Db) / 24˚C (Wb),

Heating capacity : Inside air temperature 20˚C (Db) / 15˚C (Wb), outside air temperature 7˚C (Db) / 6˚C (Wb),

The specification may be subject to change without notice for purpose of improvement.

| Model | Indoor Unit | | | RAS-B50P2KVSG(B)-ND | |
|---|---|---|---|---|---|
| | Outdoor Unit | | | RAS-50P2AVSG-ND | |
| Cooling capacity | | | (kW) | 5.00 | |
| Cooling capacity range | | | (kW) | (1.00-2.50-6.50) | |
| SEER (Average/Warmer/Colder) | | | | (7.00) | |
| Heating capacity | | | (kW) | 6.00 | |
| Heating capacity range | | | (kW) | (1.00-3.00-8.70) | |
| SCOP | | | | 4.60 | |
| Power supply | | | | 1Ph., 220V, 230V, 240V, 50Hz. | |
| Electrical characteristic | Indoor unit | Operation mode | | Cooling | Heating |
| | | Running current | (A) | 0.29(0.30-0.28) | 0.29(0.30-0.28) |
| | | Power consumption | (W) | 40 | 40 |
| | | Power factor | (%) | 61 | 61 |
| | | Indoor noise (H/L/Q) | (dB) | 45/31/26 | 47/31/26 |
| | | Indoor air flow (H/M/L) | ($m^3$/hr) | 1010/740/480 | 1010/740/480 |
| | Outdoor unit | Running current | (A) | 6.90 | 7.23 |
| | | Power consumption | (W) | 1380 | 1460 |
| | | Power factor | (%) | 91 | 92 |
| | | Outdoor noise (Rated) | (dB) | 49 | 52 |
| | | Air flow rate | ($m^3$/hr) | 2700 | 2970 |
| | Total | Rated Current | (A) | 6.88(7.20-6.61) | 7.20(7.53-6.90) |
| | | Rated power consumption | (W) | 1420 | 1500 |
| | | Rated power factor | (%) | 90.0 | 91.0 |
| | Maximum current (total) | | (A) | 15.85 | |
| | Maximum of power consumption | | (W) | 3645 | |
| Dimension | Indoor unit | Height | (mm) | 320 | |
| | | Width | (mm) | 1076 | |
| | | Depth | (mm) | 248 | |
| | | Weight | (kg) | 15 | |
| | Outdoor unit | Height | (mm) | 710 | |
| | | Width | (mm) | 900 | |
| | | Depth | (mm) | 320 | |
| | | Weight | (kg) | 56 | |
| Refrigerant | | | | R32 | |
| Refrigerant amount | | | (kg) | 1.7 | |
| Connecting pipe | | Gas side | (mm) | 9.52 | |
| | | Liquid side | (mm) | 6.35 | |
| | | Chargeless length condition | (m) | 30 | |
| | | Maximum length | (m) | 30 | |
| | | Maximum Height | (m) | 15 | |
| Energy label (Cooling / Heating) | | | | A++/(A+++/-/A+) | |
| Operating range | Cooling | | °C | Inside:21~32 /Outside:-15~46 | |
| | Heating | | °C | Inside:0~28 /Outside:-30~24 | |

**This specification refer to JISC9612, rated conditions.**

Cooling capacity : Inside air temperature 27˚C (Db) / 19˚C (Wb), outside air temperature 35˚C (Db) / 24˚C (Wb),

Heating capacity : Inside air temperature 20˚C (Db) / 15˚C (Wb), outside air temperature 7˚C (Db) / 6˚C (Wb),

The specification may be subject to change without notice for purpose of improvement.

# 3. Dimension

**Indoor Unit : RAS-B__*P2KVSG(B)-ND (*25/35)**

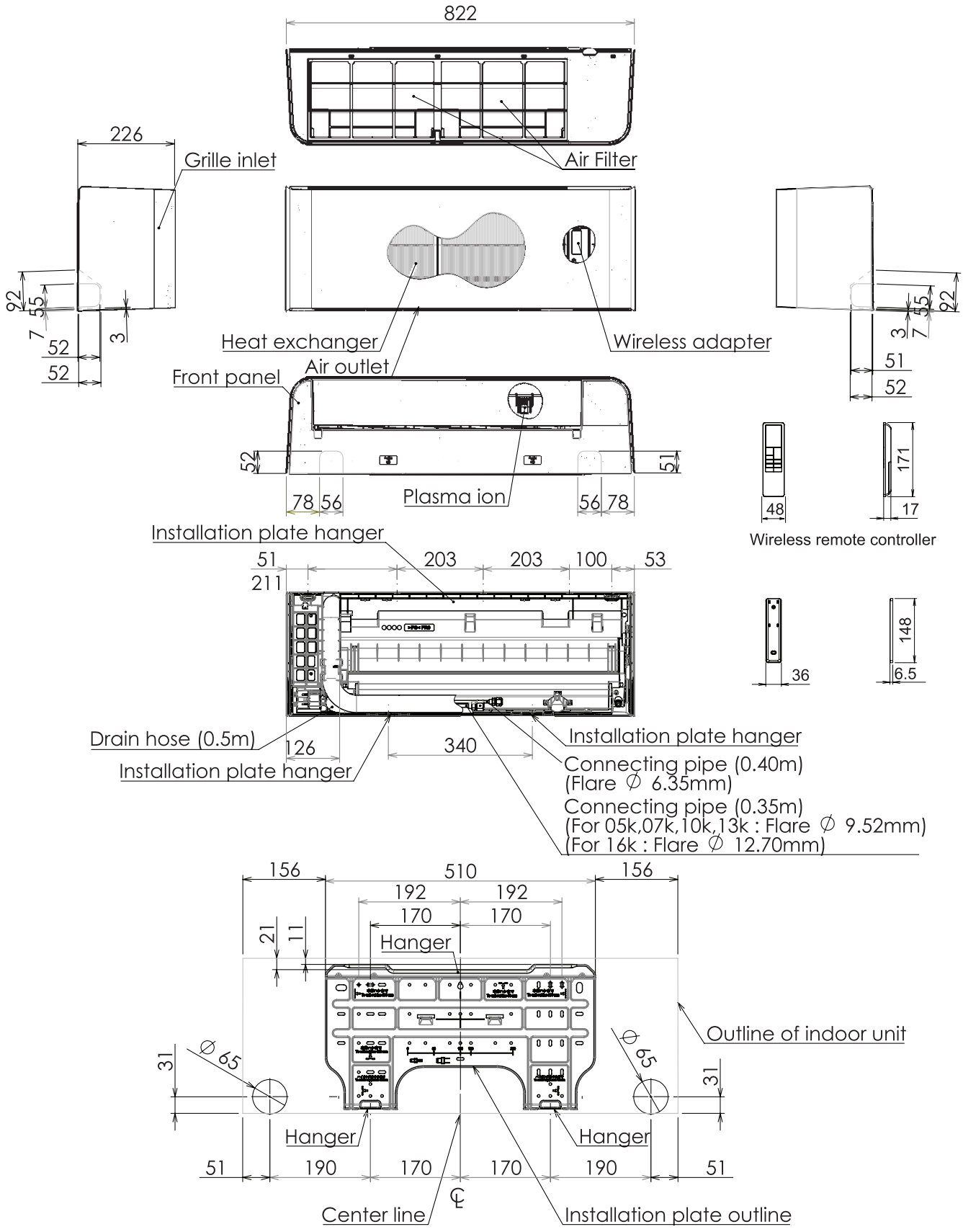

## Indoor Unit : RAS-B50P2KVSG(B)-ND

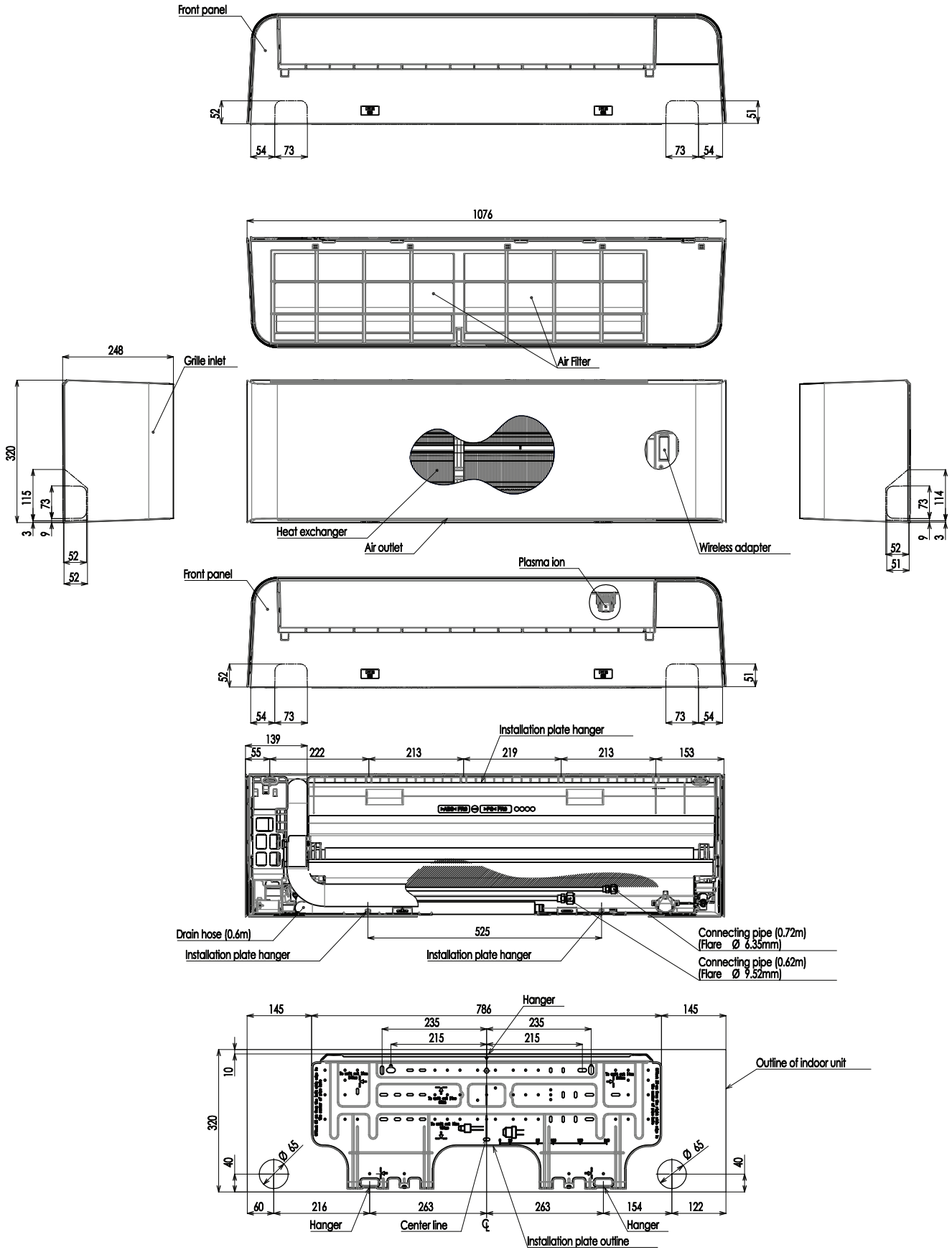

## Outdoor Unit : RAS-__*P2AVSG-ND (*25/35)

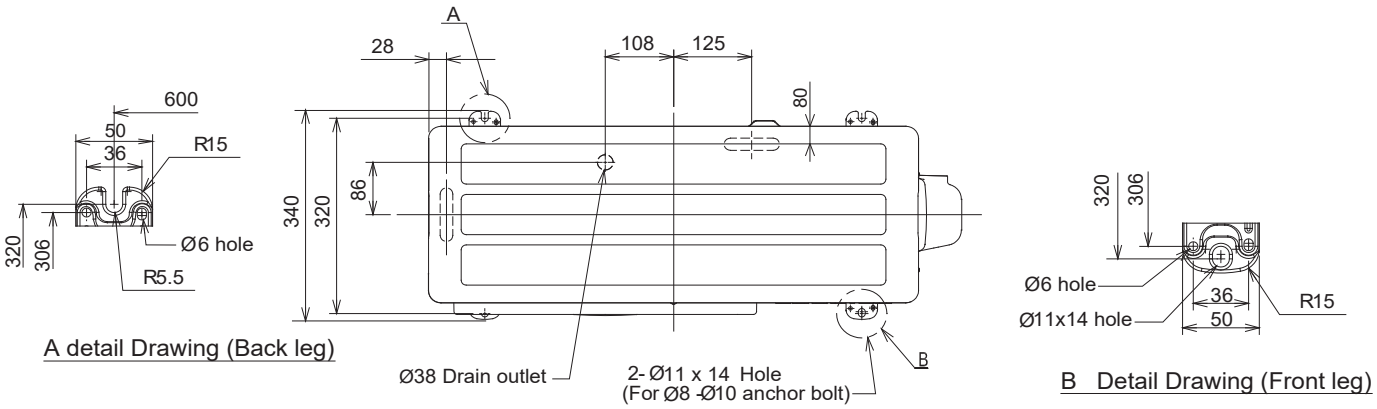


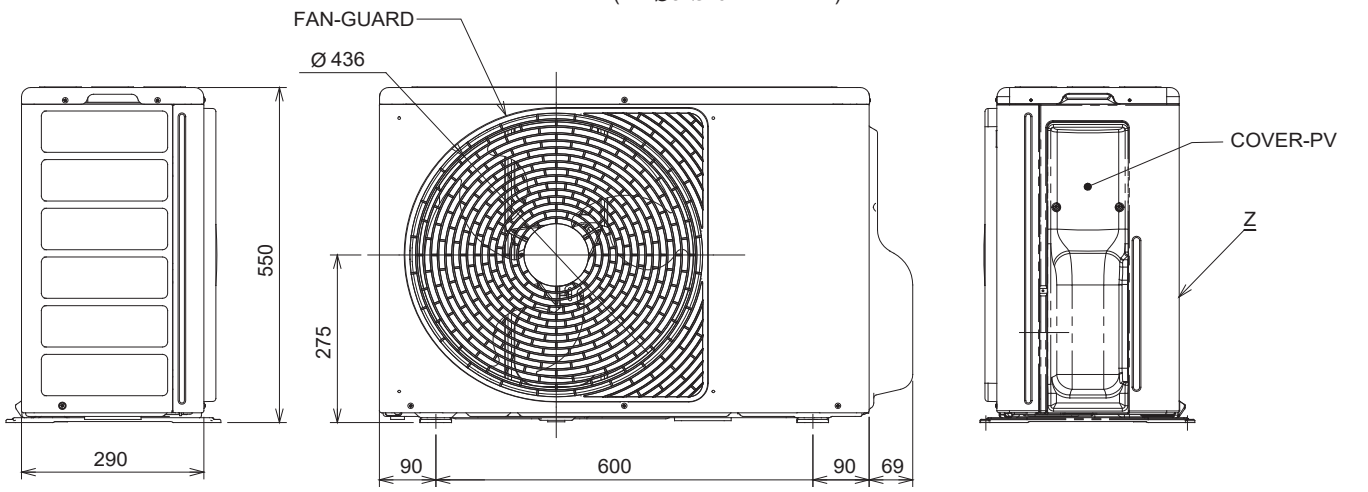


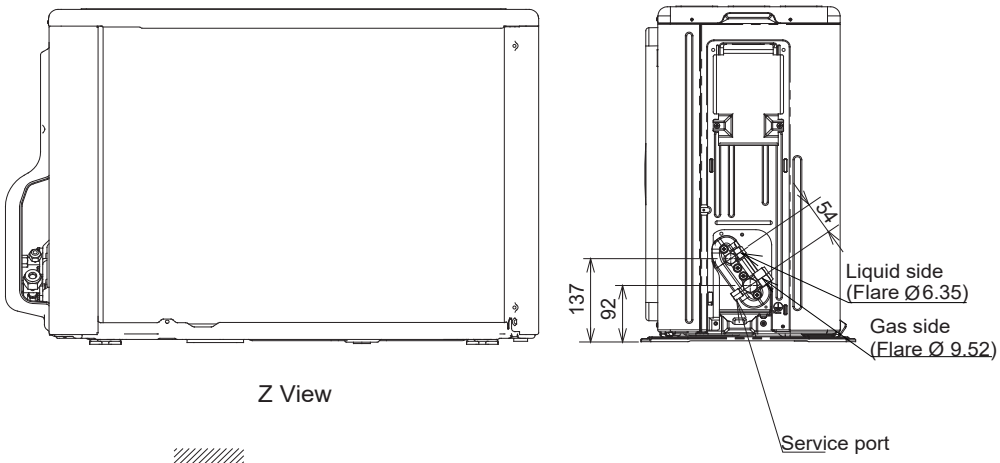


Z View

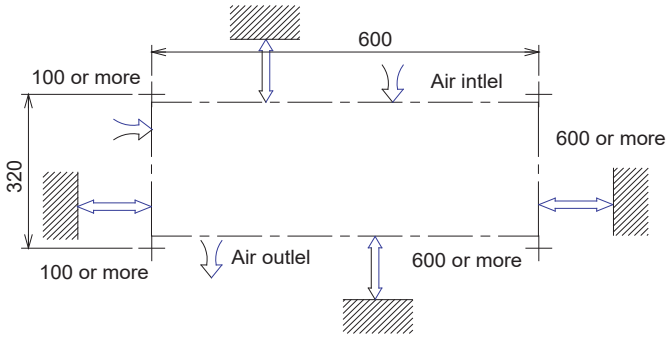


Installation dimension

(Unit : mm)

## Outdoor Unit : RAS-50P2AVSG-ND

| | Name | Note |
|---|---|---|
| ① | Refrigerant piping hole Indoor/Outdoor Unit connecting wire inlet hole. | - |
| ② | Power supply inlet hole. | dia.38 Knockout hole |

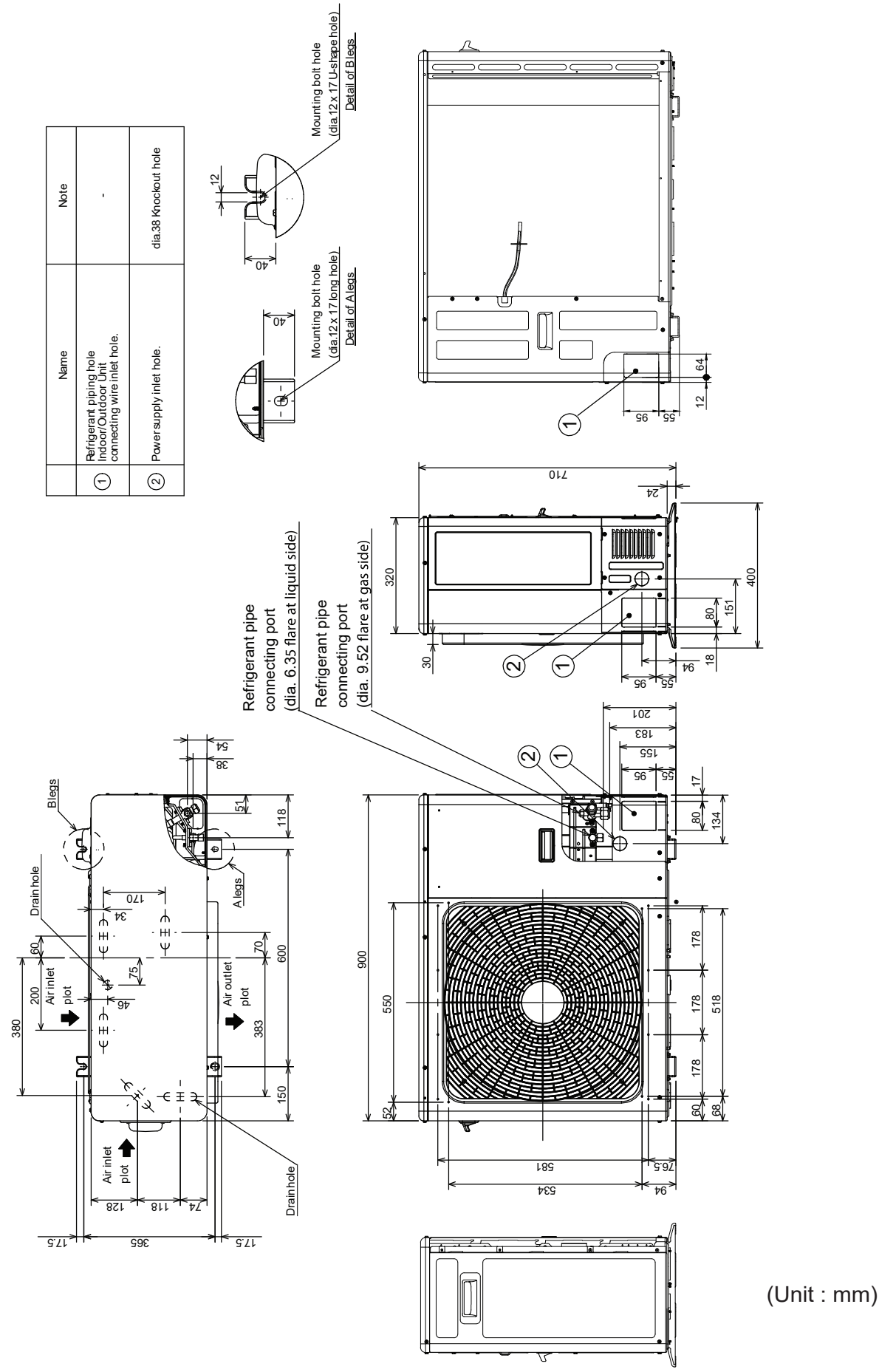


(Unit : mm)

# 4. Wiring didgrams

**RAS-B25P2KVSG(B)-ND ; RAS-25P2AVSG-ND**
**RAS-B35P2KVSG(B)-ND ; RAS-35P2AVSG-ND**

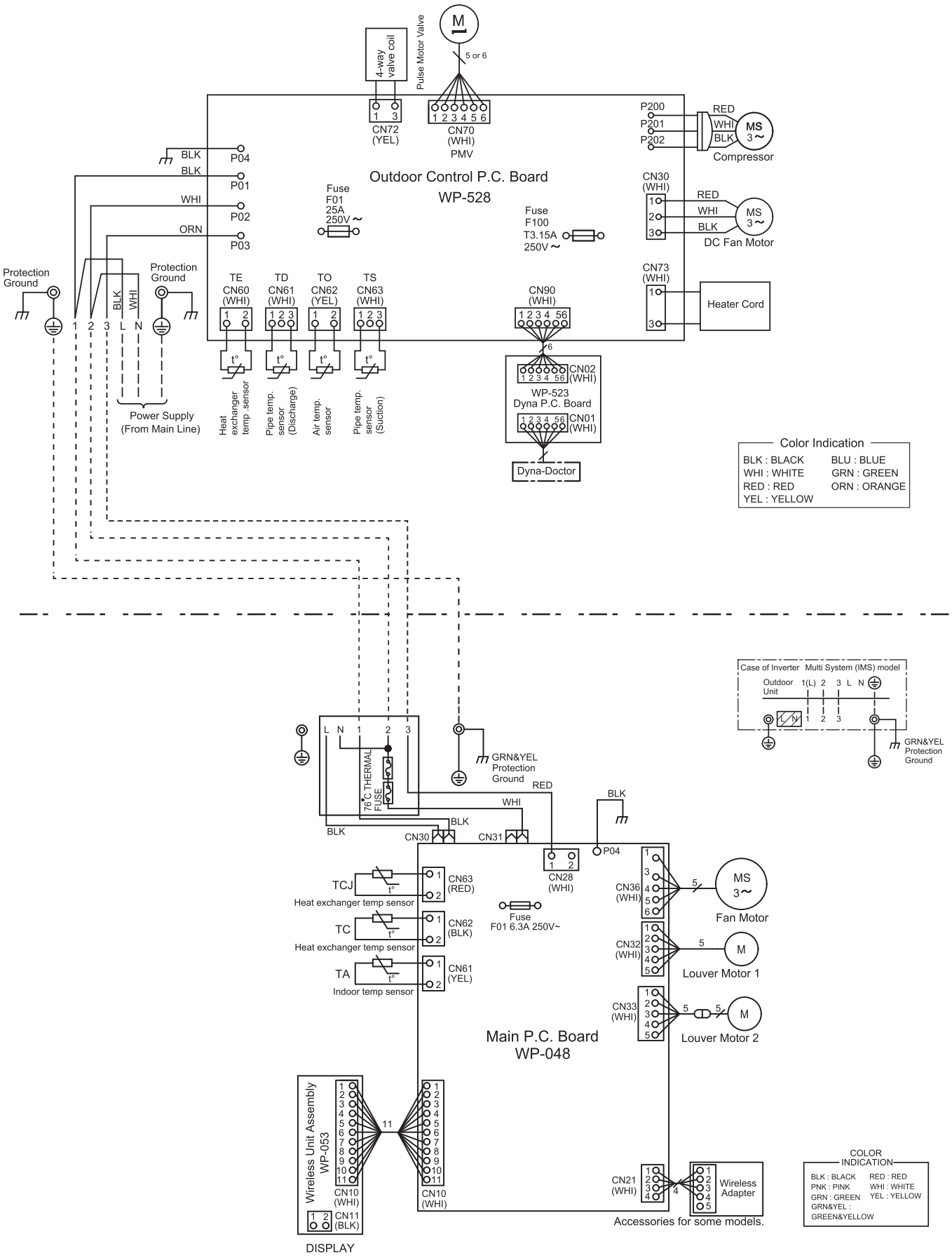

## RAS-B50P2KVSG(B)-ND ; RAS-50P2AVSG-ND

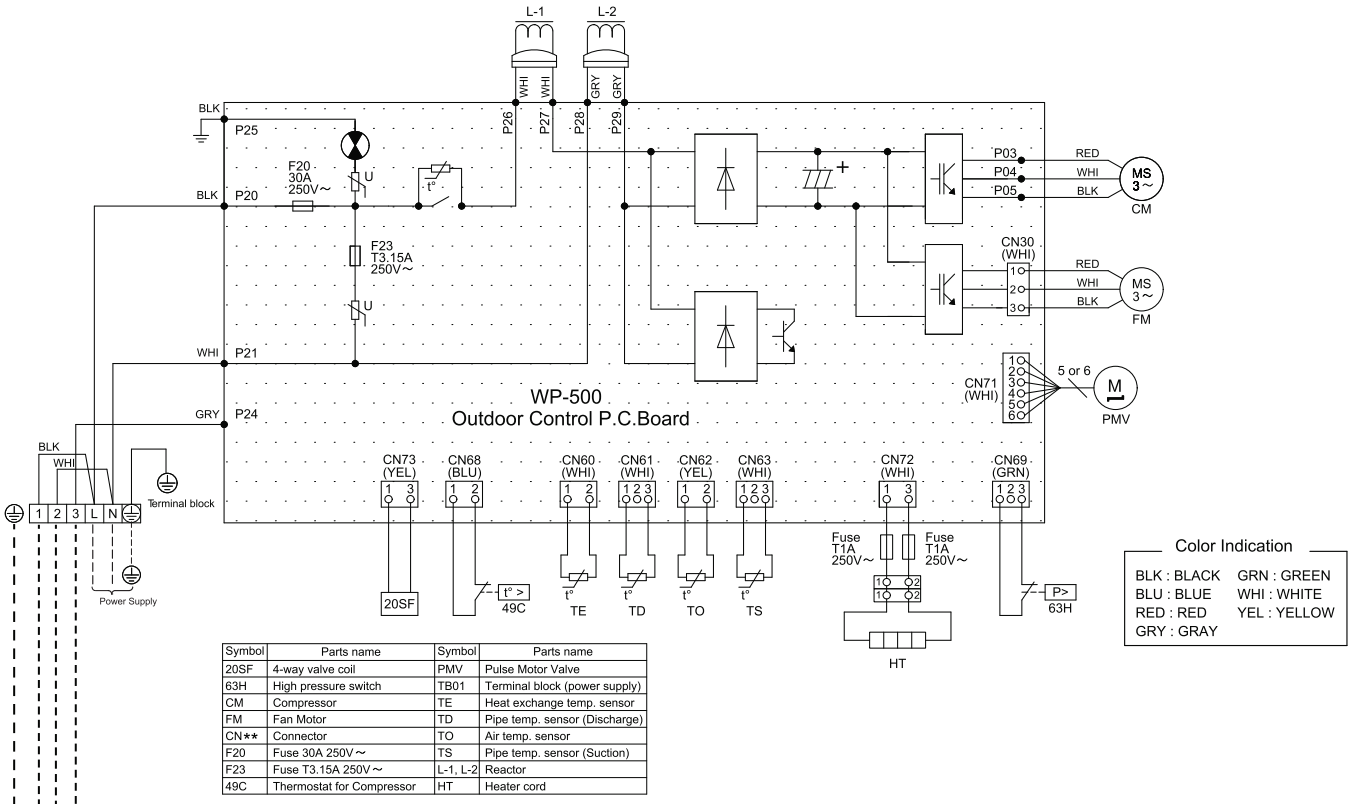


| Symbol | Parts name | Symbol | Parts name |
|---|---|---|---|
| 20SF | 4-way valve coil | PMV | Pulse Motor Valve |
| 63H | High pressure switch | TB01 | Terminal block (power supply) |
| CM | Compressor | TE | Heat exchange temp. sensor |
| FM | Fan Motor | TD | Pipe temp. sensor (Discharge) |
| CN** | Connector | TO | Air temp. sensor |
| F20 | Fuse 30A 250V～ | TS | Pipe temp. sensor (Suction) |
| F23 | Fuse T3.15A 250V～ | L-1, L-2 | Reactor |
| 49C | Thermostat for Compressor | HT | Heater cord |

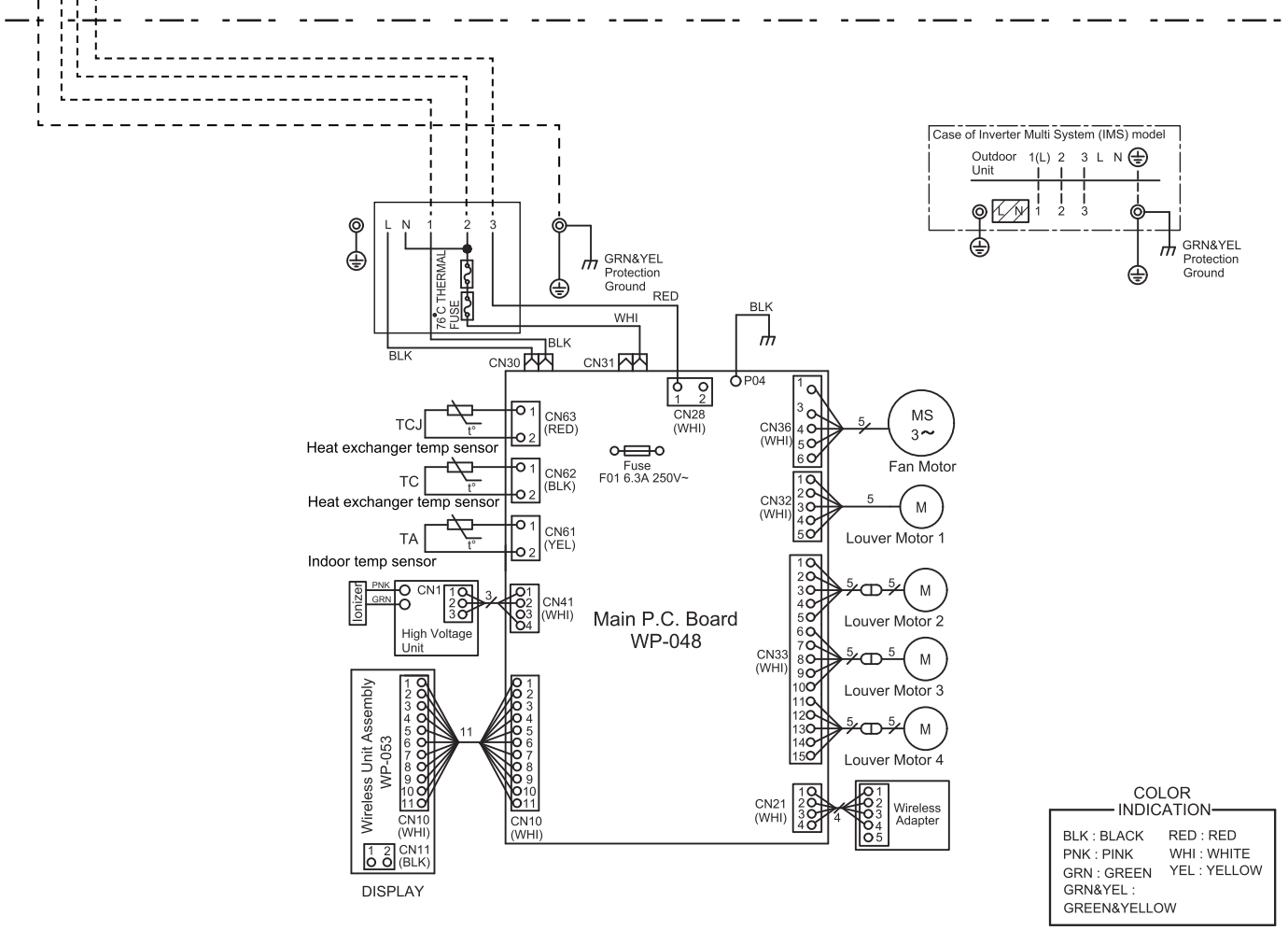

# 5. Refrigerant Cycle Diagram

**RAS-B25P2KVSG(B)-ND ; RAS-25P2AVSG-ND**
**RAS-B35P2KVSG(B)-ND ; RAS-35P2AVSG-ND**

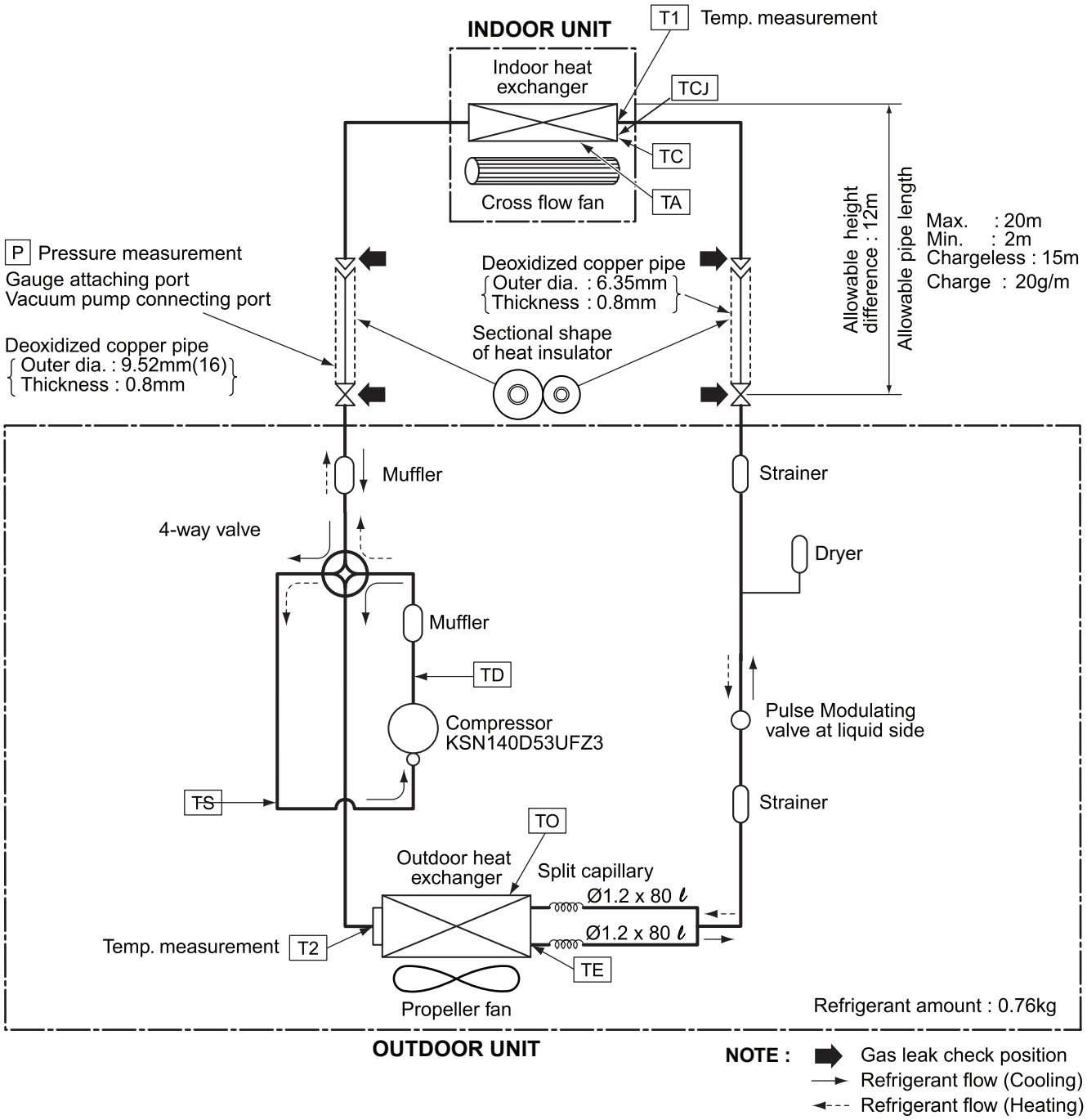


**NOTE :**

- The maximum pipe length of this air conditioner is 15 m. When the pipe length exceeds 15m, the additional charging of refrigerant, 20g per 1m for the part of pipe exceeded 15m is required. (Max. 100g)

**RAS-B50P2KVSG(B)-ND ; RAS-50P2AVSG-ND**

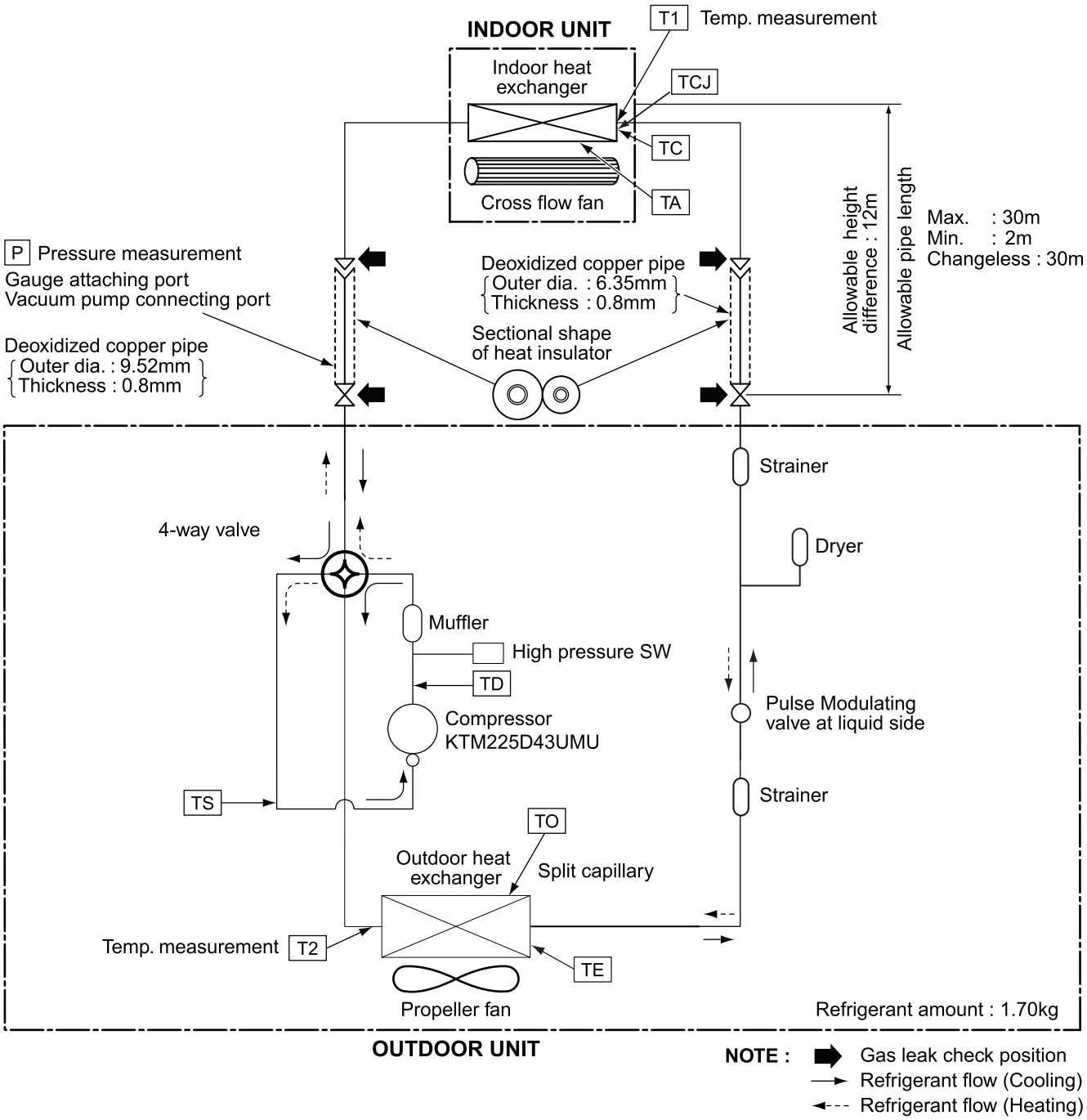


**NOTE :**

- The maximum pipe length of this air conditioner is 15 m. When the pipe length exceeds 15m, the additional charging of refrigerant, 20g per 1m for the part of pipe exceeded 15m is required. (Max. 100g)

# 6. Air Speed Distribution

RAS-B*__P2KVSG(B)-ND (*25/35)

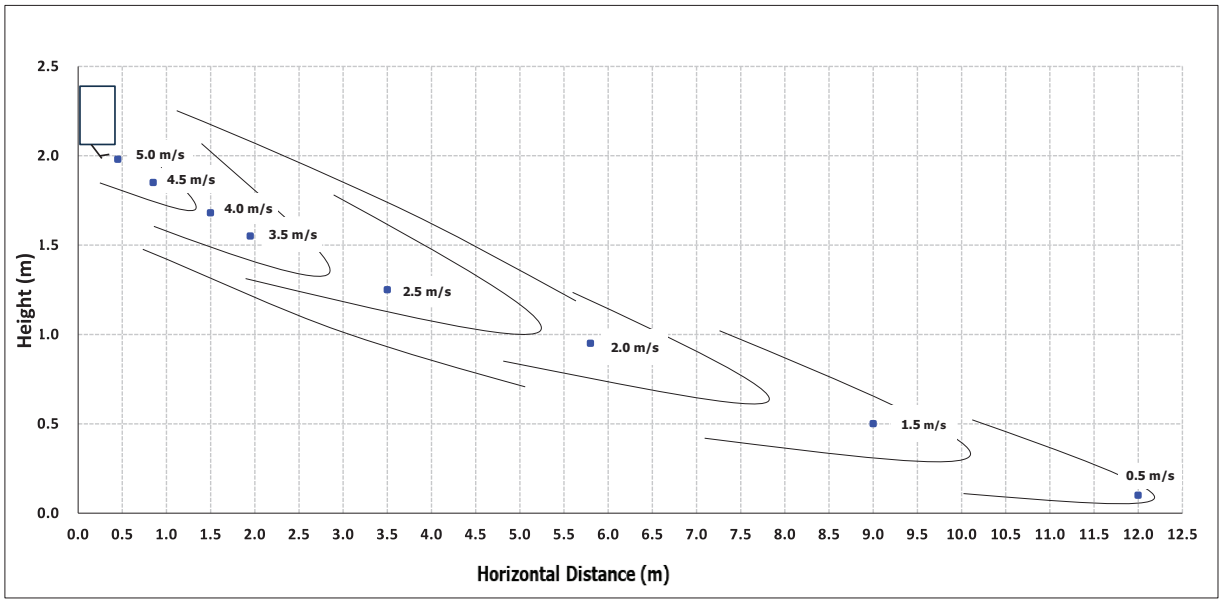


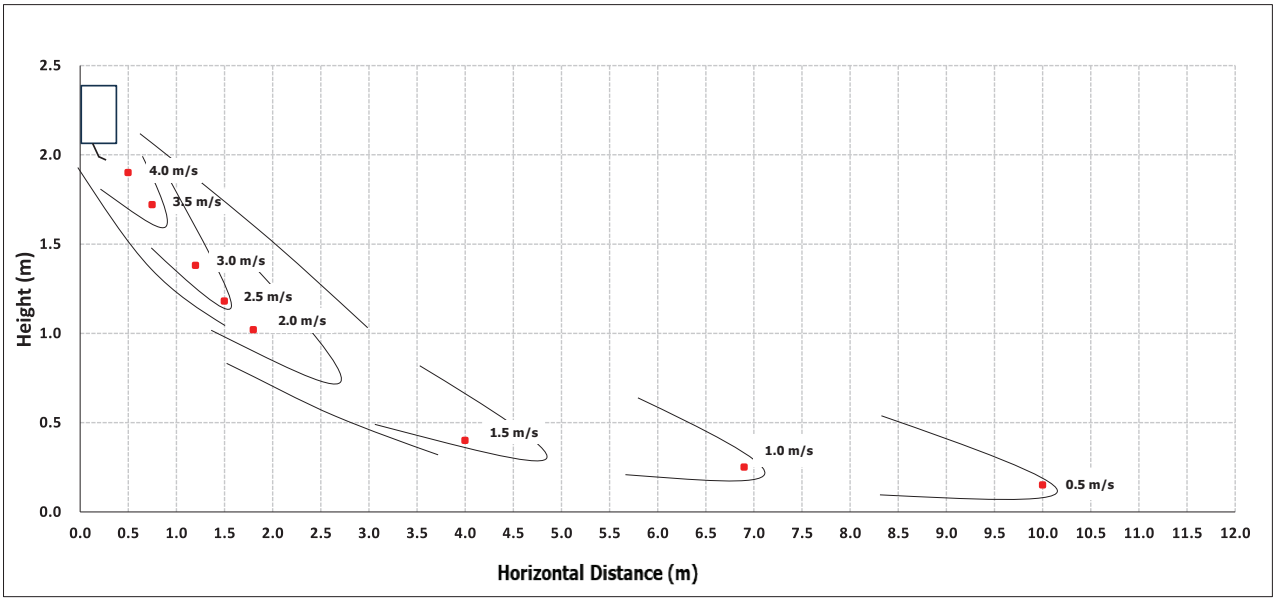

RAS-B50P2KVSG(B)-ND

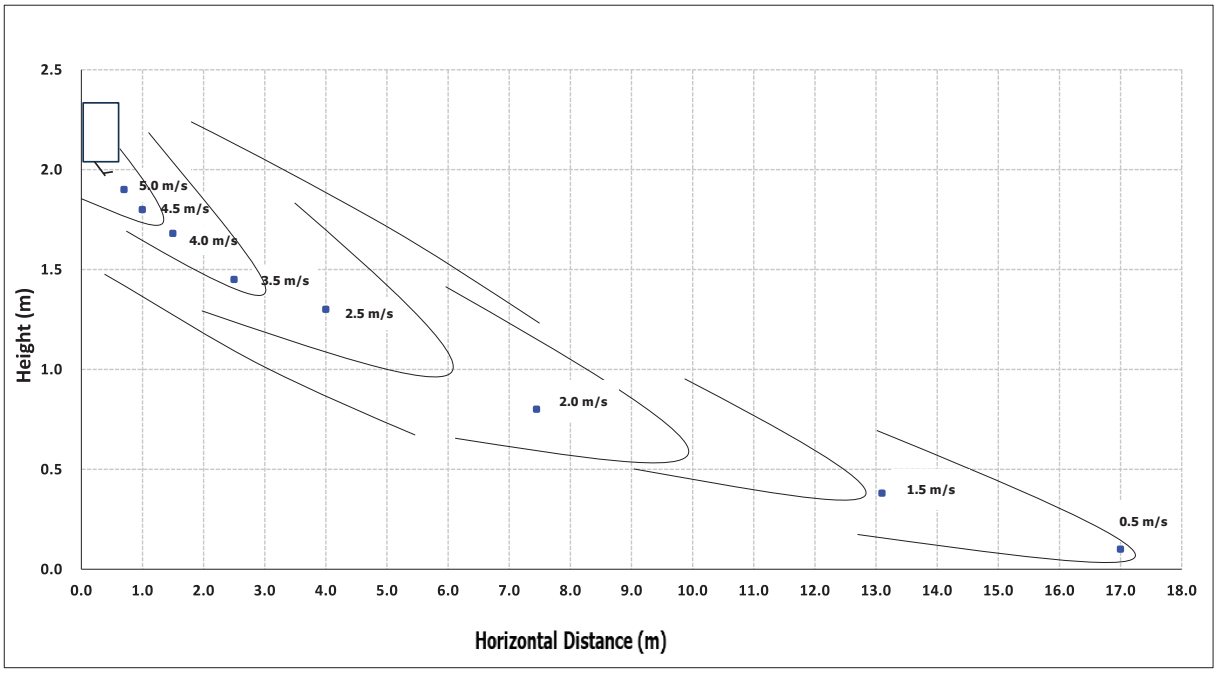


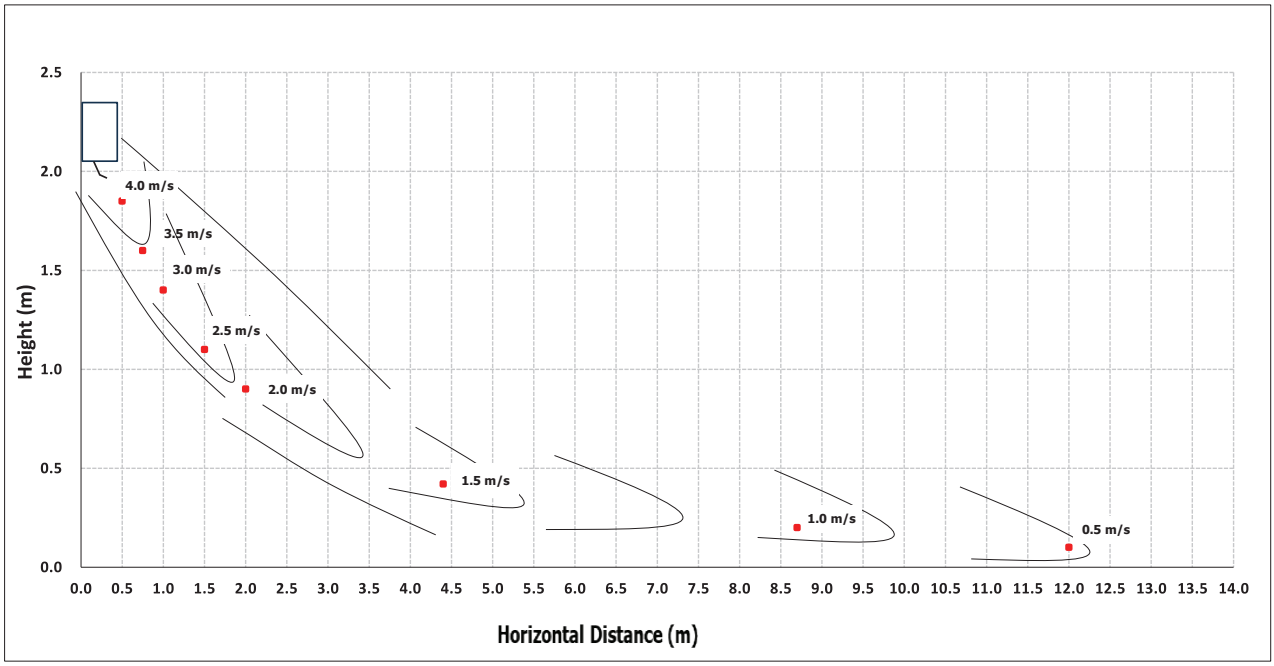

# 7. Sound Characteristics (NC Curve)

## RAS-25P2AVSG-ND

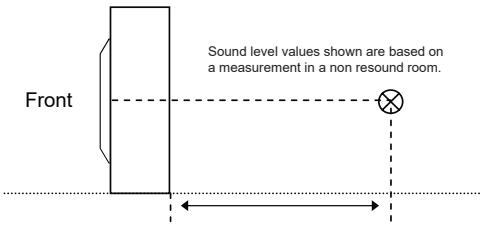


| Measured point | Specification |
|---|---|
| | Cooling |
| Horizontal 1.0 m | 45 |

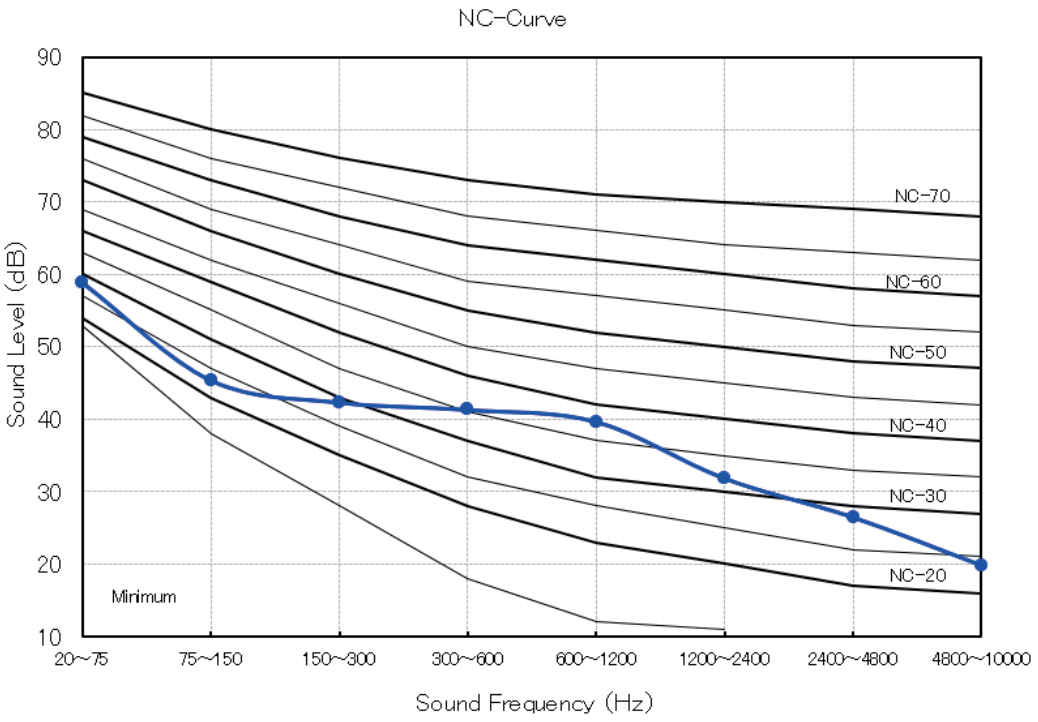


| Measured point | Specification |
|---|---|
| | Heating |
| Horizontal 1.0 m | 48 |

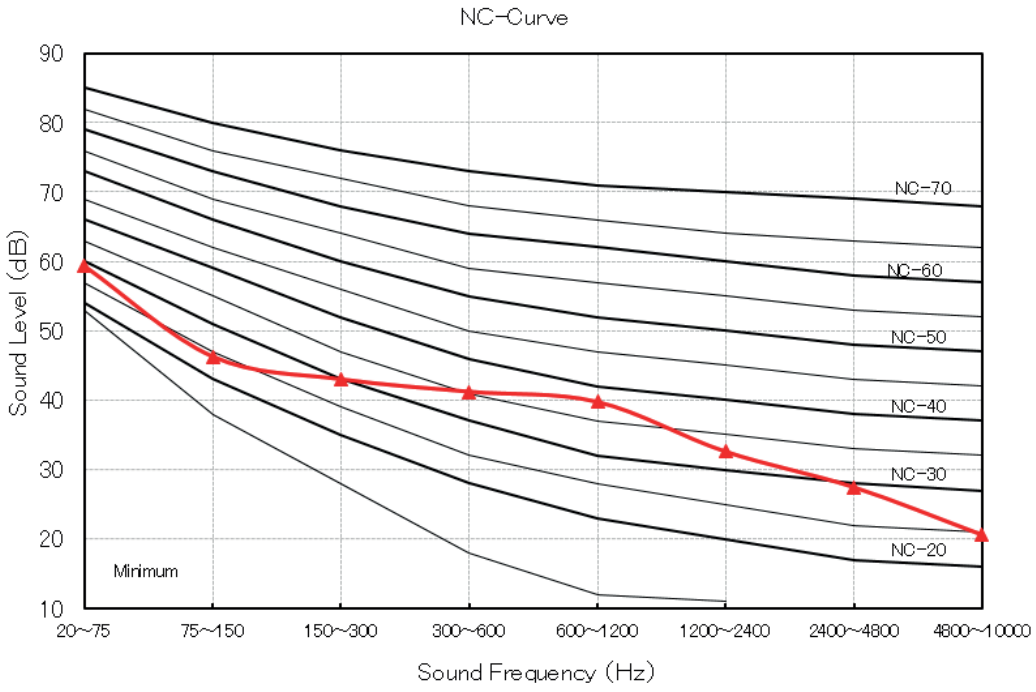

**RAS-35G3AVSG-ND**

| Measured point | Specification |
|---|---|
| | Cooling |
| Horizontal 1.0 m | 47 |

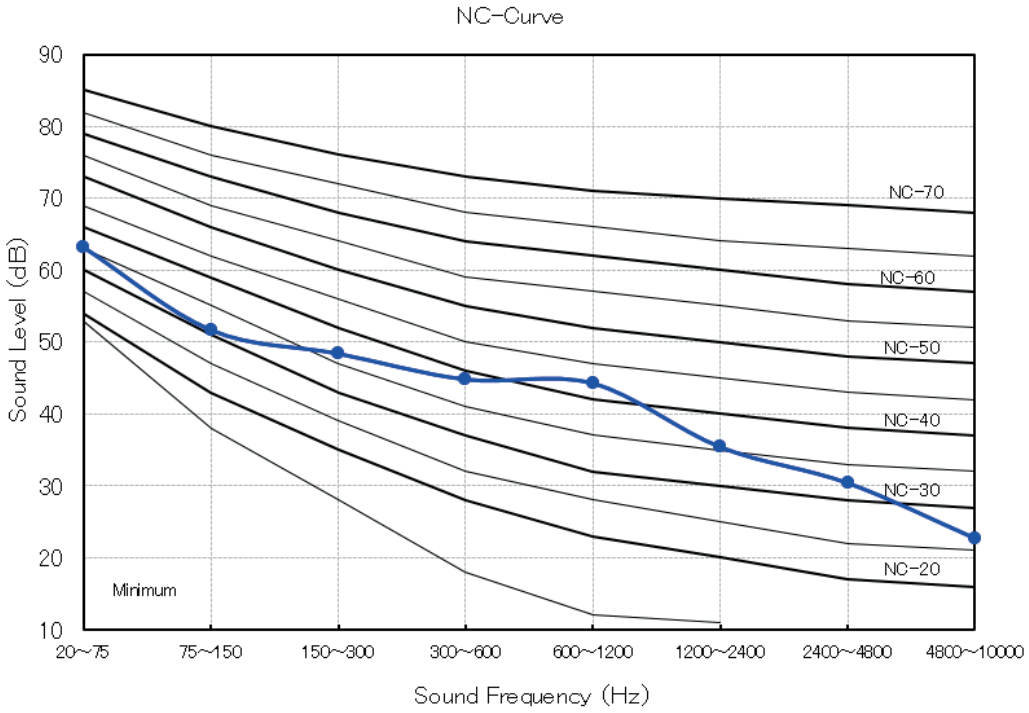


| Measured point | Specification |
|---|---|
| | Heating |
| Horizontal 1.0 m | 48 |

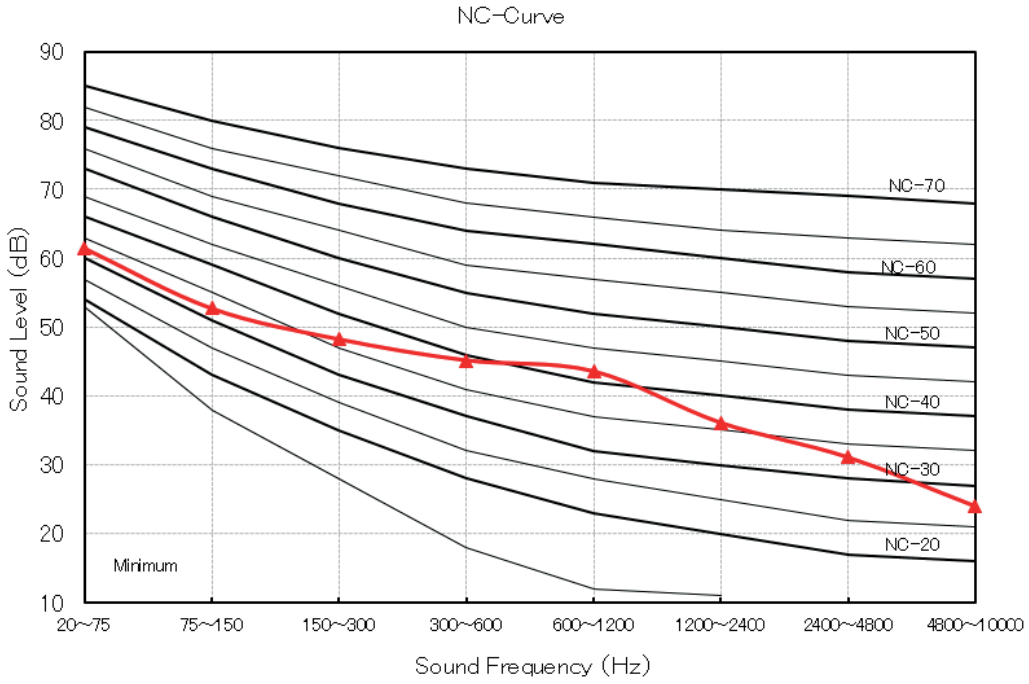

## RAS-50G3AVSG-ND

| Measured point | Specification |
|---|---|
| | Cooling |
| Horizontal 1.0 m | 49 |

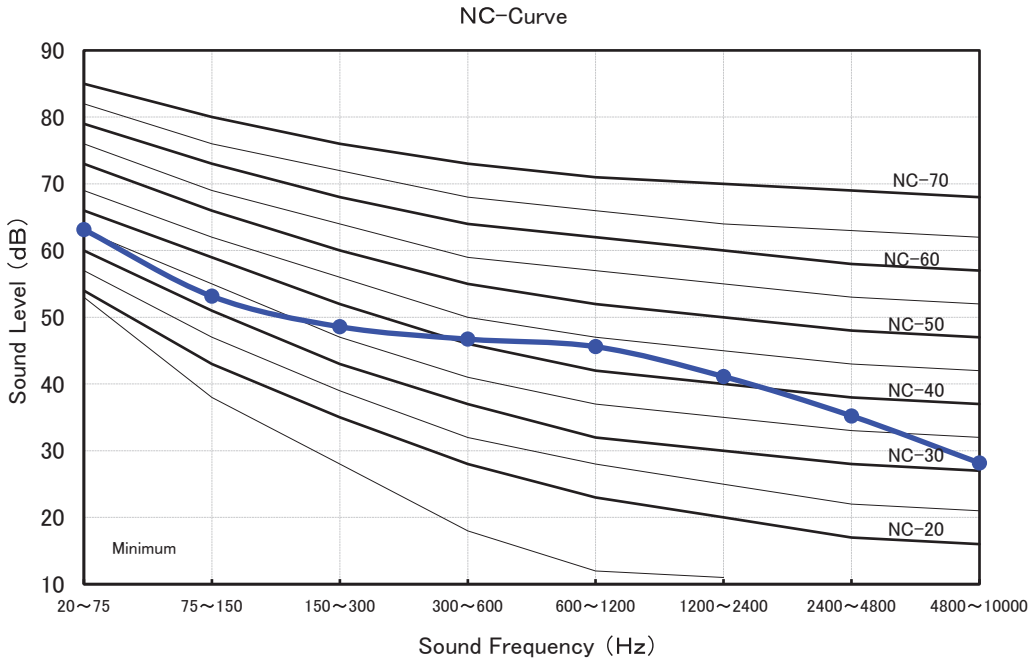


| Measured point | Specification |
|---|---|
| | Heating |
| Horizontal 1.0 m | 52 |

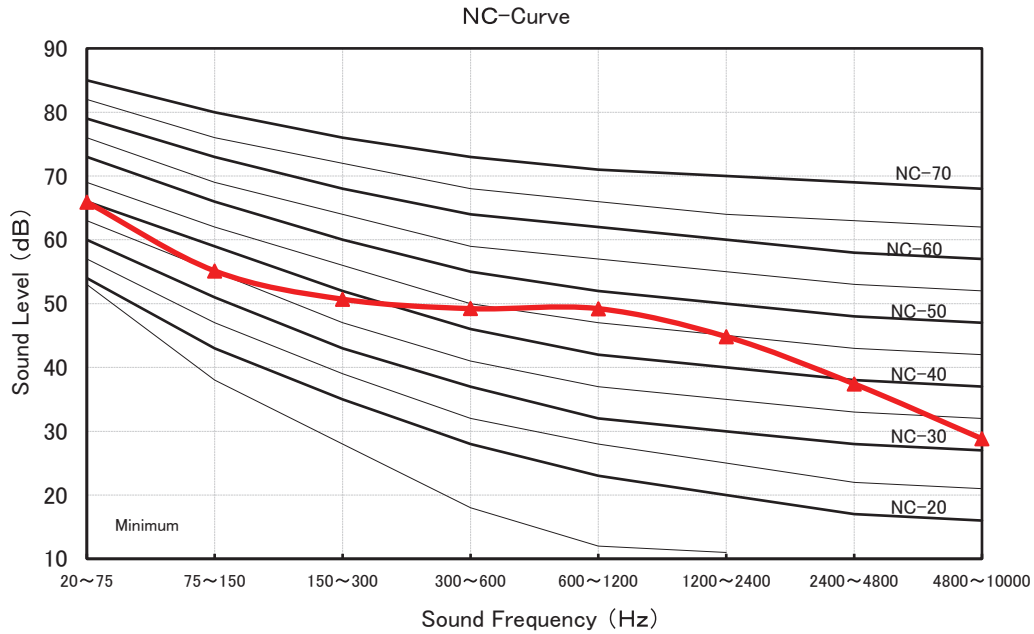

# 8. Capacity Table

**Product models : RAS-B25P2KVSG(B)-ND ; RAS-25P2AVSG-ND**

Specification of product at standard condition

| Standard Condition | | |
|---|---|---|
| | Indoor | 27°C (DB) / 19°C (WB) |
| | Outdoor | 35°C (DB) / 24°C (WB) |

| | | |
|---|---|---|
| Total Cooling Capacity (TC) | 2.80 | kW |
| Sensible Heat Capacity (SHC) | 2.14 | kW |

| Outdoor air temperature | Indoor air temperature | | | | | | | | | | | | | |
|---|---|---|---|---|---|---|---|---|---|---|---|---|---|---|
| | 20.0°C (DB) 14.0°C (WB) | | 23.0°C (DB) 16.0°C (WB) | | 26.0°C (DB) 18.0°C (WB) | | 27.0°C (DB) 19.0°C (WB) | | 28.0°C (DB) 20.0°C (WB) | | 30.0°C (DB) 22.0°C (WB) | | 32.0°C (DB) 24.0°C (WB) | |
| DB (°C) | TC | SHC | TC | SHC | TC | SHC | TC | SHC | TC | SHC | TC | SHC | TC | SHC |
| 20 | 2.74 | 2.26 | 3.03 | 2.41 | 3.24 | 2.56 | 3.34 | 2.55 | 3.43 | 2.55 | 3.64 | 2.52 | 3.80 | 2.46 |
| 21 | 2.71 | 2.24 | 3.00 | 2.38 | 3.21 | 2.53 | 3.30 | 2.52 | 3.40 | 2.52 | 3.60 | 2.49 | 3.76 | 2.43 |
| 22 | 2.68 | 2.21 | 2.96 | 2.36 | 3.17 | 2.50 | 3.27 | 2.50 | 3.36 | 2.49 | 3.56 | 2.46 | 3.72 | 2.41 |
| 23 | 2.65 | 2.19 | 2.93 | 2.33 | 3.14 | 2.48 | 3.23 | 2.47 | 3.32 | 2.46 | 3.52 | 2.43 | 3.68 | 2.38 |
| 24 | 2.62 | 2.17 | 2.90 | 2.31 | 3.10 | 2.45 | 3.20 | 2.44 | 3.29 | 2.44 | 3.48 | 2.41 | 3.64 | 2.35 |
| 25 | 2.60 | 2.14 | 2.87 | 2.28 | 3.07 | 2.42 | 3.16 | 2.41 | 3.25 | 2.41 | 3.44 | 2.38 | 3.60 | 2.33 |
| 26 | 2.57 | 2.12 | 2.83 | 2.25 | 3.03 | 2.39 | 3.12 | 2.39 | 3.21 | 2.38 | 3.40 | 2.35 | 3.56 | 2.30 |
| 27 | 2.54 | 2.09 | 2.80 | 2.23 | 3.00 | 2.37 | 3.09 | 2.36 | 3.18 | 2.36 | 3.36 | 2.33 | 3.52 | 2.27 |
| 28 | 2.51 | 2.07 | 2.77 | 2.20 | 2.96 | 2.34 | 3.05 | 2.33 | 3.14 | 2.33 | 3.32 | 2.30 | 3.48 | 2.25 |
| 29 | 2.48 | 2.04 | 2.74 | 2.18 | 2.93 | 2.31 | 3.02 | 2.30 | 3.10 | 2.30 | 3.28 | 2.27 | 3.44 | 2.22 |
| 30 | 2.45 | 2.02 | 2.70 | 2.15 | 2.89 | 2.28 | 2.98 | 2.28 | 3.06 | 2.27 | 3.25 | 2.24 | 3.39 | 2.19 |
| 31 | 2.42 | 2.00 | 2.67 | 2.12 | 2.86 | 2.26 | 2.94 | 2.25 | 3.03 | 2.25 | 3.21 | 2.22 | 3.35 | 2.17 |
| 32 | 2.39 | 1.97 | 2.64 | 2.10 | 2.82 | 2.23 | 2.91 | 2.22 | 2.99 | 2.22 | 3.17 | 2.19 | 3.31 | 2.14 |
| 33 | 2.36 | 1.95 | 2.61 | 2.07 | 2.79 | 2.20 | 2.87 | 2.19 | 2.95 | 2.19 | 3.13 | 2.16 | 3.27 | 2.11 |
| 34 | 2.33 | 1.92 | 2.57 | 2.05 | 2.75 | 2.17 | 2.84 | 2.17 | 2.92 | 2.16 | 3.09 | 2.14 | 3.23 | 2.09 |
| **35** | **2.30** | **1.90** | **2.54** | **2.02** | **2.72** | **2.15** | **2.80** | **2.14** | **2.88** | **2.14** | **3.05** | **2.11** | **3.19** | **2.06** |
| 36 | 2.27 | 1.87 | 2.51 | 1.99 | 2.69 | 2.12 | 2.76 | 2.11 | 2.84 | 2.11 | 3.01 | 2.08 | 3.15 | 2.03 |
| 37 | 2.24 | 1.85 | 2.47 | 1.97 | 2.65 | 2.09 | 2.73 | 2.09 | 2.81 | 2.08 | 2.97 | 2.05 | 3.11 | 2.01 |
| 38 | 2.21 | 1.82 | 2.44 | 1.94 | 2.62 | 2.06 | 2.69 | 2.06 | 2.77 | 2.05 | 2.93 | 2.03 | 3.07 | 1.98 |
| 39 | 2.18 | 1.80 | 2.41 | 1.92 | 2.58 | 2.04 | 2.66 | 2.03 | 2.73 | 2.03 | 2.89 | 2.00 | 3.03 | 1.96 |
| 40 | 2.15 | 1.78 | 2.38 | 1.89 | 2.55 | 2.01 | 2.62 | 2.00 | 2.70 | 2.00 | 2.85 | 1.97 | 2.99 | 1.93 |
| 41 | 2.12 | 1.75 | 2.34 | 1.86 | 2.51 | 1.98 | 2.58 | 1.98 | 2.66 | 1.97 | 2.82 | 1.95 | 2.94 | 1.90 |
| 42 | 2.09 | 1.73 | 2.31 | 1.84 | 2.48 | 1.95 | 2.55 | 1.95 | 2.62 | 1.94 | 2.78 | 1.92 | 2.90 | 1.88 |
| 43 | 2.06 | 1.70 | 2.28 | 1.81 | 2.44 | 1.93 | 2.51 | 1.92 | 2.58 | 1.92 | 2.74 | 1.89 | 2.86 | 1.85 |
| 44 | 2.03 | 1.68 | 2.25 | 1.79 | 2.41 | 1.90 | 2.48 | 1.89 | 2.55 | 1.89 | 2.70 | 1.87 | 2.82 | 1.82 |
| 45 | 2.00 | 1.65 | 2.21 | 1.76 | 2.37 | 1.87 | 2.44 | 1.87 | 2.51 | 1.86 | 2.66 | 1.84 | 2.78 | 1.80 |
| 46 | 1.98 | 1.63 | 2.18 | 1.73 | 2.34 | 1.84 | 2.40 | 1.84 | 2.47 | 1.83 | 2.62 | 1.81 | 2.74 | 1.77 |

**Product models : RAS-B35P2KVSG(B)-ND ; RAS-35P2AVSG-ND**

Specification of product at standard condition

| Standard Condition | | |
|---|---|---|
| | Indoor | 27°C (DB) / 19°C (WB) |
| | Outdoor | 35°C (DB) / 24°C (WB) |

| | | |
|---|---|---|
| Total Cooling Capacity (TC) | 3.50 | kW |
| Sensible Heat Capacity (SHC) | 2.60 | kW |

| Outdoor air temperature | Indoor air temperature | | | | | | | | | | | | | |
|---|---|---|---|---|---|---|---|---|---|---|---|---|---|---|
| | 20.0°C (DB) 14.0°C (WB) | | 23.0°C (DB) 16.0°C (WB) | | 26.0°C (DB) 18.0°C (WB) | | 27.0°C (DB) 19.0°C (WB) | | 28.0°C (DB) 20.0°C (WB) | | 30.0°C (DB) 22.0°C (WB) | | 32.0°C (DB) 24.0°C (WB) | |
| DB (°C) | TC | SHC | TC | SHC | TC | SHC | TC | SHC | TC | SHC | TC | SHC | TC | SHC |
| 20 | 3.43 | 2.76 | 3.79 | 2.93 | 4.05 | 3.11 | 4.17 | 3.10 | 4.29 | 3.09 | 4.55 | 3.05 | 4.76 | 2.97 |
| 21 | 3.39 | 2.73 | 3.75 | 2.90 | 4.01 | 3.08 | 4.13 | 3.07 | 4.25 | 3.06 | 4.50 | 3.01 | 4.70 | 2.94 |
| 22 | 3.35 | 2.70 | 3.70 | 2.87 | 3.97 | 3.05 | 4.08 | 3.03 | 4.20 | 3.03 | 4.45 | 2.98 | 4.65 | 2.91 |
| 23 | 3.32 | 2.67 | 3.66 | 2.84 | 3.92 | 3.01 | 4.04 | 3.00 | 4.15 | 2.99 | 4.40 | 2.95 | 4.60 | 2.87 |
| 24 | 3.28 | 2.64 | 3.62 | 2.80 | 3.88 | 2.98 | 3.99 | 2.97 | 4.11 | 2.96 | 4.35 | 2.92 | 4.55 | 2.84 |
| 25 | 3.24 | 2.61 | 3.58 | 2.77 | 3.84 | 2.95 | 3.95 | 2.93 | 4.06 | 2.93 | 4.30 | 2.88 | 4.50 | 2.81 |
| 26 | 3.21 | 2.58 | 3.54 | 2.74 | 3.79 | 2.91 | 3.90 | 2.90 | 4.02 | 2.89 | 4.25 | 2.85 | 4.45 | 2.78 |
| 27 | 3.17 | 2.55 | 3.50 | 2.71 | 3.75 | 2.88 | 3.86 | 2.87 | 3.97 | 2.86 | 4.20 | 2.82 | 4.40 | 2.75 |
| 28 | 3.13 | 2.52 | 3.46 | 2.68 | 3.71 | 2.85 | 3.81 | 2.83 | 3.92 | 2.83 | 4.16 | 2.78 | 4.35 | 2.72 |
| 29 | 3.10 | 2.49 | 3.42 | 2.65 | 3.66 | 2.81 | 3.77 | 2.80 | 3.88 | 2.79 | 4.11 | 2.75 | 4.29 | 2.68 |
| 30 | 3.06 | 2.46 | 3.38 | 2.61 | 3.62 | 2.78 | 3.72 | 2.77 | 3.83 | 2.76 | 4.06 | 2.72 | 4.24 | 2.65 |
| 31 | 3.02 | 2.43 | 3.34 | 2.58 | 3.57 | 2.74 | 3.68 | 2.73 | 3.78 | 2.73 | 4.01 | 2.69 | 4.19 | 2.62 |
| 32 | 2.99 | 2.40 | 3.30 | 2.55 | 3.53 | 2.71 | 3.63 | 2.70 | 3.74 | 2.69 | 3.96 | 2.65 | 4.14 | 2.59 |
| 33 | 2.95 | 2.37 | 3.26 | 2.52 | 3.49 | 2.68 | 3.59 | 2.67 | 3.69 | 2.66 | 3.91 | 2.62 | 4.09 | 2.56 |
| 34 | 2.91 | 2.34 | 3.22 | 2.49 | 3.44 | 2.64 | 3.54 | 2.63 | 3.65 | 2.63 | 3.86 | 2.59 | 4.04 | 2.52 |
| **35** | **2.87** | **2.31** | **3.17** | **2.46** | **3.40** | **2.61** | **3.50** | **2.60** | **3.60** | **2.59** | **3.81** | **2.55** | **3.99** | **2.49** |
| 36 | 2.84 | 2.28 | 3.13 | 2.43 | 3.36 | 2.58 | 3.46 | 2.57 | 3.55 | 2.56 | 3.76 | 2.52 | 3.94 | 2.46 |
| 37 | 2.80 | 2.25 | 3.09 | 2.39 | 3.31 | 2.54 | 3.41 | 2.53 | 3.51 | 2.53 | 3.71 | 2.49 | 3.89 | 2.43 |
| 38 | 2.76 | 2.22 | 3.05 | 2.36 | 3.27 | 2.51 | 3.37 | 2.50 | 3.46 | 2.49 | 3.67 | 2.46 | 3.83 | 2.40 |
| 39 | 2.73 | 2.19 | 3.01 | 2.33 | 3.23 | 2.48 | 3.32 | 2.47 | 3.42 | 2.46 | 3.62 | 2.42 | 3.78 | 2.36 |
| 40 | 2.69 | 2.16 | 2.97 | 2.30 | 3.18 | 2.44 | 3.28 | 2.43 | 3.37 | 2.43 | 3.57 | 2.39 | 3.73 | 2.33 |
| 41 | 2.65 | 2.13 | 2.93 | 2.27 | 3.14 | 2.41 | 3.23 | 2.40 | 3.32 | 2.39 | 3.52 | 2.36 | 3.68 | 2.30 |
| 42 | 2.62 | 2.10 | 2.89 | 2.24 | 3.09 | 2.38 | 3.19 | 2.37 | 3.28 | 2.36 | 3.47 | 2.33 | 3.63 | 2.27 |
| 43 | 2.58 | 2.07 | 2.85 | 2.20 | 3.05 | 2.34 | 3.14 | 2.33 | 3.23 | 2.33 | 3.42 | 2.29 | 3.58 | 2.24 |
| 44 | 2.54 | 2.04 | 2.81 | 2.17 | 3.01 | 2.31 | 3.10 | 2.30 | 3.18 | 2.29 | 3.37 | 2.26 | 3.53 | 2.20 |
| 45 | 2.51 | 2.01 | 2.77 | 2.14 | 2.96 | 2.28 | 3.05 | 2.27 | 3.14 | 2.26 | 3.32 | 2.23 | 3.48 | 2.17 |
| 46 | 2.47 | 1.98 | 2.73 | 2.11 | 2.92 | 2.24 | 3.01 | 2.23 | 3.09 | 2.23 | 3.27 | 2.19 | 3.42 | 2.14 |

**Product models : RAS-B50P2KVSG(B)-ND ; RAS-50P2AVSG-ND**

Specification of product at standard condition

| Standard Condition | | |
|---|---|---|
| | Indoor | 27°C (DB) / 19°C (WB) |
| | Outdoor | 35°C (DB) / 24°C (WB) |

| | | |
|---|---|---|
| Total Cooling Capacity (TC) | 5.00 | kW |
| Sensible Heat Capacity (SHC) | 3.50 | kW |

| Outdoor air temperature | Indoor air temperature | | | | | | | | | | | | | |
|---|---|---|---|---|---|---|---|---|---|---|---|---|---|---|
| | 20.0°C (DB) 14.0°C (WB) | | 23.0°C (DB) 16.0°C (WB) | | 26.0°C (DB) 18.0°C (WB) | | 27.0°C (DB) 19.0°C (WB) | | 28.0°C (DB) 20.0°C (WB) | | 30.0°C (DB) 22.0°C (WB) | | 32.0°C (DB) 24.0°C (WB) | |
| DB (°C) | TC | SHC | TC | SHC | TC | SHC | TC | SHC | TC | SHC | TC | SHC | TC | SHC |
| 20 | 4.90 | 3.73 | 5.41 | 3.95 | 5.79 | 4.20 | 5.96 | 4.17 | 6.13 | 4.15 | 6.49 | 4.07 | 6.79 | 3.95 |
| 21 | 4.84 | 3.69 | 5.35 | 3.91 | 5.73 | 4.15 | 5.90 | 4.13 | 6.07 | 4.11 | 6.43 | 4.03 | 6.72 | 3.91 |
| 22 | 4.79 | 3.65 | 5.29 | 3.87 | 5.67 | 4.11 | 5.83 | 4.08 | 6.00 | 4.06 | 6.36 | 3.99 | 6.65 | 3.87 |
| 23 | 4.74 | 3.61 | 5.23 | 3.83 | 5.60 | 4.06 | 5.77 | 4.04 | 5.94 | 4.02 | 6.29 | 3.94 | 6.57 | 3.83 |
| 24 | 4.69 | 3.57 | 5.18 | 3.78 | 5.54 | 4.02 | 5.71 | 3.99 | 5.87 | 3.98 | 6.22 | 3.90 | 6.50 | 3.78 |
| 25 | 4.63 | 3.53 | 5.12 | 3.74 | 5.48 | 3.97 | 5.64 | 3.95 | 5.80 | 3.93 | 6.15 | 3.85 | 6.43 | 3.74 |
| 26 | 4.58 | 3.49 | 5.06 | 3.70 | 5.42 | 3.93 | 5.58 | 3.90 | 5.74 | 3.89 | 6.08 | 3.81 | 6.35 | 3.70 |
| 27 | 4.53 | 3.45 | 5.00 | 3.66 | 5.36 | 3.88 | 5.51 | 3.86 | 5.67 | 3.84 | 6.01 | 3.77 | 6.28 | 3.66 |
| 28 | 4.48 | 3.41 | 4.94 | 3.61 | 5.29 | 3.84 | 5.45 | 3.81 | 5.61 | 3.80 | 5.94 | 3.72 | 6.21 | 3.61 |
| 29 | 4.42 | 3.37 | 4.88 | 3.57 | 5.23 | 3.79 | 5.39 | 3.77 | 5.54 | 3.75 | 5.87 | 3.68 | 6.14 | 3.57 |
| 30 | 4.37 | 3.33 | 4.83 | 3.53 | 5.17 | 3.75 | 5.32 | 3.72 | 5.47 | 3.71 | 5.80 | 3.64 | 6.06 | 3.53 |
| 31 | 4.32 | 3.29 | 4.77 | 3.49 | 5.11 | 3.70 | 5.26 | 3.68 | 5.41 | 3.66 | 5.73 | 3.59 | 5.99 | 3.48 |
| 32 | 4.27 | 3.24 | 4.71 | 3.44 | 5.04 | 3.66 | 5.19 | 3.63 | 5.34 | 3.62 | 5.66 | 3.55 | 5.92 | 3.44 |
| 33 | 4.21 | 3.20 | 4.65 | 3.40 | 4.98 | 3.61 | 5.13 | 3.59 | 5.28 | 3.57 | 5.59 | 3.50 | 5.84 | 3.40 |
| 34 | 4.16 | 3.16 | 4.59 | 3.36 | 4.92 | 3.57 | 5.06 | 3.54 | 5.21 | 3.53 | 5.52 | 3.46 | 5.77 | 3.36 |
| **35** | **4.11** | **3.12** | **4.54** | **3.32** | **4.86** | **3.52** | **5.00** | **3.50** | **5.14** | **3.48** | **5.45** | **3.42** | **5.70** | **3.31** |
| 36 | 4.05 | 3.08 | 4.48 | 3.27 | 4.79 | 3.48 | 4.94 | 3.46 | 5.08 | 3.44 | 5.38 | 3.37 | 5.62 | 3.27 |
| 37 | 4.00 | 3.04 | 4.42 | 3.23 | 4.73 | 3.43 | 4.87 | 3.41 | 5.01 | 3.39 | 5.31 | 3.33 | 5.55 | 3.23 |
| 38 | 3.95 | 3.00 | 4.36 | 3.19 | 4.67 | 3.39 | 4.81 | 3.37 | 4.94 | 3.35 | 5.24 | 3.28 | 5.48 | 3.19 |
| 39 | 3.90 | 2.96 | 4.30 | 3.15 | 4.61 | 3.34 | 4.74 | 3.32 | 4.88 | 3.30 | 5.17 | 3.24 | 5.40 | 3.14 |
| 40 | 3.84 | 2.92 | 4.24 | 3.10 | 4.55 | 3.30 | 4.68 | 3.28 | 4.81 | 3.26 | 5.10 | 3.20 | 5.33 | 3.10 |
| 41 | 3.79 | 2.88 | 4.19 | 3.06 | 4.48 | 3.25 | 4.62 | 3.23 | 4.75 | 3.22 | 5.03 | 3.15 | 5.26 | 3.06 |
| 42 | 3.74 | 2.84 | 4.13 | 3.02 | 4.42 | 3.20 | 4.55 | 3.19 | 4.68 | 3.17 | 4.96 | 3.11 | 5.18 | 3.02 |
| 43 | 3.69 | 2.80 | 4.07 | 2.98 | 4.36 | 3.16 | 4.49 | 3.14 | 4.61 | 3.13 | 4.89 | 3.07 | 5.11 | 2.97 |
| 44 | 3.63 | 2.76 | 4.01 | 2.93 | 4.30 | 3.11 | 4.42 | 3.10 | 4.55 | 3.08 | 4.82 | 3.02 | 5.04 | 2.93 |
| 45 | 3.58 | 2.72 | 3.95 | 2.89 | 4.23 | 3.07 | 4.36 | 3.05 | 4.48 | 3.04 | 4.75 | 2.98 | 4.97 | 2.89 |
| 46 | 3.53 | 2.68 | 3.90 | 2.85 | 4.17 | 3.02 | 4.29 | 3.01 | 4.42 | 2.99 | 4.68 | 2.93 | 4.89 | 2.85 |

# 9. Part Load Performance

Sigle Split Type

Indoor: RAS-B25P2KVSG(B)-ND
Outdoor: RAS-25P2AVSG-ND

| Operation range | | Cooling Q | Cooling P | Heating Q | Heating P |
|---|---|---|---|---|---|
| MINIMUM | W | 1000 | 240 | 1000 | 200 |
| RATING | W | 2800 | 630 | 3200 | 650 |
| MAXIMUM | W | 4400 | 1150 | 7400 | 2400 |

**Cooling**

| Outdoor Temperature DB (°C) | Parts Load (%) 100 Q | 100 P | 90 Q | 90 P | 80 Q | 80 P | 70 Q | 70 P | 60 Q | 60 P | 50 Q | 50 P | 40 Q | 40 P | 30 Q | 30 P | 20 Q | 20 P | 10 Q | 10 P |
|---|---|---|---|---|---|---|---|---|---|---|---|---|---|---|---|---|---|---|---|---|
| 20 | 3339 | 495 | 3005 | 402 | 2671 | 355 | 2337 | 307 | 2003 | 260 | 1670 | 212 | 1336 | 195 | 1193 | 188 | 1193 | 188 | 1193 | 188 |
| 21 | 3303 | 504 | 2973 | 410 | 2642 | 361 | 2312 | 313 | 1982 | 264 | 1652 | 216 | 1321 | 199 | 1180 | 192 | 1180 | 192 | 1180 | 192 |
| 22 | 3267 | 513 | 2940 | 417 | 2614 | 368 | 2287 | 318 | 1960 | 269 | 1634 | 220 | 1307 | 203 | 1167 | 195 | 1167 | 195 | 1167 | 195 |
| 23 | 3231 | 522 | 2908 | 424 | 2585 | 374 | 2262 | 324 | 1939 | 274 | 1616 | 224 | 1292 | 206 | 1154 | 199 | 1154 | 199 | 1154 | 199 |
| 24 | 3195 | 531 | 2876 | 432 | 2556 | 381 | 2237 | 330 | 1917 | 279 | 1598 | 227 | 1278 | 210 | 1141 | 202 | 1141 | 202 | 1141 | 202 |
| 25 | 3159 | 540 | 2843 | 439 | 2527 | 387 | 2212 | 335 | 1896 | 283 | 1580 | 231 | 1264 | 213 | 1128 | 206 | 1128 | 206 | 1128 | 206 |
| 26 | 3123 | 549 | 2811 | 447 | 2499 | 394 | 2186 | 341 | 1874 | 288 | 1562 | 235 | 1249 | 217 | 1116 | 209 | 1116 | 209 | 1116 | 209 |
| 27 | 3087 | 558 | 2779 | 454 | 2470 | 400 | 2161 | 346 | 1852 | 293 | 1544 | 239 | 1235 | 220 | 1103 | 212 | 1103 | 212 | 1103 | 212 |
| 28 | 3052 | 567 | 2746 | 461 | 2441 | 407 | 2136 | 352 | 1831 | 297 | 1526 | 243 | 1221 | 224 | 1090 | 216 | 1090 | 216 | 1090 | 216 |
| 29 | 3016 | 576 | 2714 | 469 | 2412 | 413 | 2111 | 358 | 1809 | 302 | 1508 | 247 | 1206 | 228 | 1077 | 219 | 1077 | 219 | 1077 | 219 |
| 30 | 2980 | 585 | 2682 | 476 | 2384 | 420 | 2086 | 363 | 1788 | 307 | 1490 | 251 | 1192 | 231 | 1064 | 223 | 1064 | 223 | 1064 | 223 |
| 31 | 2944 | 594 | 2649 | 483 | 2355 | 426 | 2061 | 369 | 1766 | 312 | 1472 | 255 | 1177 | 235 | 1051 | 226 | 1051 | 226 | 1051 | 226 |
| 32 | 2908 | 603 | 2617 | 491 | 2326 | 433 | 2035 | 375 | 1745 | 316 | 1454 | 258 | 1163 | 238 | 1039 | 230 | 1039 | 230 | 1039 | 230 |
| 33 | 2872 | 612 | 2585 | 498 | 2297 | 439 | 2010 | 380 | 1723 | 321 | 1436 | 262 | 1149 | 242 | 1026 | 233 | 1026 | 233 | 1026 | 233 |
| 34 | 2836 | 621 | 2552 | 505 | 2269 | 446 | 1985 | 386 | 1702 | 326 | 1418 | 266 | 1134 | 245 | 1013 | 237 | 1013 | 237 | 1013 | 237 |
| **35** | **2800** | **630** | **2520** | **513** | **2240** | **452** | **1960** | **391** | **1680** | **331** | **1400** | **270** | **1120** | **249** | **1000** | **240** | **1000** | **240** | **1000** | **240** |
| 36 | 2764 | 639 | 2488 | 520 | 2211 | 458 | 1935 | 397 | 1658 | 335 | 1382 | 274 | 1106 | 253 | 987 | 243 | 987 | 243 | 987 | 243 |
| 37 | 2728 | 648 | 2455 | 527 | 2183 | 465 | 1910 | 403 | 1637 | 340 | 1364 | 278 | 1091 | 256 | 974 | 247 | 974 | 247 | 974 | 247 |
| 38 | 2692 | 657 | 2423 | 535 | 2154 | 471 | 1885 | 408 | 1615 | 345 | 1346 | 282 | 1077 | 260 | 962 | 250 | 962 | 250 | 962 | 250 |
| 39 | 2656 | 666 | 2391 | 542 | 2125 | 478 | 1859 | 414 | 1594 | 350 | 1328 | 285 | 1063 | 263 | 949 | 254 | 949 | 254 | 949 | 254 |
| 40 | 2620 | 675 | 2358 | 549 | 2096 | 484 | 1834 | 419 | 1572 | 354 | 1310 | 289 | 1048 | 267 | 936 | 257 | 936 | 257 | 936 | 257 |
| 41 | 2584 | 684 | 2326 | 557 | 2068 | 491 | 1809 | 425 | 1551 | 359 | 1292 | 293 | 1034 | 270 | 923 | 261 | 923 | 261 | 923 | 261 |
| 42 | 2548 | 693 | 2294 | 564 | 2039 | 497 | 1784 | 431 | 1529 | 364 | 1274 | 297 | 1019 | 274 | 910 | 264 | 910 | 264 | 910 | 264 |
| 43 | 2513 | 702 | 2261 | 571 | 2010 | 504 | 1759 | 436 | 1508 | 369 | 1256 | 301 | 1005 | 278 | 897 | 268 | 897 | 268 | 897 | 268 |
| 44 | 2477 | 711 | 2229 | 579 | 1981 | 510 | 1734 | 442 | 1486 | 373 | 1238 | 305 | 991 | 281 | 885 | 271 | 885 | 271 | 885 | 271 |
| 45 | 2441 | 720 | 2197 | 586 | 1953 | 517 | 1708 | 447 | 1464 | 378 | 1220 | 309 | 976 | 285 | 872 | 274 | 872 | 274 | 872 | 274 |
| 46 | 2405 | 729 | 2164 | 593 | 1924 | 523 | 1683 | 453 | 1443 | 383 | 1202 | 313 | 962 | 288 | 859 | 278 | 859 | 278 | 859 | 278 |

**Heating**

| Outdoor Temperature DB (°C) | Parts Load (%) 100 Q | 100 P | 90 Q | 90 P | 80 Q | 80 P | 70 Q | 70 P | 60 Q | 60 P | 50 Q | 50 P | 40 Q | 40 P | 30 Q | 30 P | 20 Q | 20 P | 10 Q | 10 P |
|---|---|---|---|---|---|---|---|---|---|---|---|---|---|---|---|---|---|---|---|---|
| -30 | 1184 | 374 | 1066 | 306 | 947 | 268 | 829 | 231 | 710 | 193 | 592 | 155 | 474 | 134 | 370 | 115 | 370 | 115 | 370 | 115 |
| -29 | 1233 | 383 | 1110 | 313 | 987 | 275 | 863 | 236 | 740 | 198 | 617 | 159 | 493 | 137 | 385 | 118 | 385 | 118 | 385 | 118 |
| -28 | 1283 | 392 | 1154 | 321 | 1026 | 281 | 898 | 242 | 770 | 202 | 641 | 163 | 513 | 140 | 401 | 121 | 401 | 121 | 401 | 121 |
| -27 | 1332 | 402 | 1199 | 329 | 1066 | 288 | 932 | 248 | 799 | 207 | 666 | 167 | 533 | 144 | 416 | 124 | 416 | 124 | 416 | 124 |
| -26 | 1381 | 411 | 1243 | 336 | 1105 | 295 | 967 | 253 | 829 | 212 | 691 | 171 | 553 | 147 | 432 | 126 | 432 | 126 | 432 | 126 |
| -25 | 1431 | 420 | 1288 | 344 | 1145 | 301 | 1002 | 259 | 858 | 217 | 715 | 174 | 572 | 150 | 447 | 129 | 447 | 129 | 447 | 129 |
| -24 | 1480 | 428 | 1332 | 350 | 1184 | 307 | 1036 | 264 | 888 | 221 | 740 | 178 | 592 | 153 | 463 | 132 | 463 | 132 | 463 | 132 |
| -23 | 1529 | 436 | 1377 | 357 | 1224 | 313 | 1071 | 269 | 918 | 225 | 765 | 181 | 612 | 156 | 478 | 134 | 478 | 134 | 478 | 134 |
| -22 | 1579 | 444 | 1421 | 363 | 1263 | 319 | 1105 | 274 | 947 | 229 | 789 | 184 | 632 | 159 | 493 | 137 | 493 | 137 | 493 | 137 |
| -21 | 1628 | 452 | 1465 | 370 | 1302 | 324 | 1140 | 279 | 977 | 233 | 814 | 188 | 651 | 162 | 509 | 139 | 509 | 139 | 509 | 139 |
| -20 | 1677 | 460 | 1510 | 377 | 1342 | 330 | 1174 | 284 | 1006 | 237 | 839 | 191 | 671 | 165 | 524 | 142 | 524 | 142 | 524 | 142 |
| -19 | 1737 | 472 | 1563 | 386 | 1389 | 338 | 1216 | 291 | 1042 | 243 | 868 | 196 | 695 | 169 | 543 | 145 | 543 | 145 | 543 | 145 |
| -18 | 1796 | 483 | 1616 | 395 | 1437 | 347 | 1257 | 298 | 1078 | 249 | 898 | 201 | 718 | 173 | 561 | 149 | 561 | 149 | 561 | 149 |
| -17 | 1855 | 495 | 1670 | 405 | 1484 | 355 | 1299 | 305 | 1113 | 255 | 928 | 205 | 742 | 177 | 580 | 152 | 580 | 152 | 580 | 152 |
| -16 | 1914 | 506 | 1723 | 414 | 1531 | 363 | 1340 | 312 | 1149 | 261 | 957 | 210 | 766 | 181 | 598 | 156 | 598 | 156 | 598 | 156 |
| -15 | 1973 | 518 | 1776 | 424 | 1579 | 371 | 1381 | 319 | 1184 | 267 | 987 | 215 | 789 | 185 | 617 | 159 | 617 | 159 | 617 | 159 |
| -14 | 2013 | 523 | 1812 | 428 | 1610 | 376 | 1409 | 323 | 1208 | 270 | 1006 | 217 | 805 | 187 | 629 | 161 | 629 | 161 | 629 | 161 |
| -13 | 2052 | 529 | 1847 | 433 | 1642 | 380 | 1437 | 326 | 1231 | 273 | 1026 | 220 | 821 | 189 | 641 | 163 | 641 | 163 | 641 | 163 |
| -12 | 2092 | 535 | 1883 | 438 | 1674 | 384 | 1464 | 330 | 1255 | 276 | 1046 | 222 | 837 | 191 | 654 | 165 | 654 | 165 | 654 | 165 |
| -11 | 2131 | 541 | 1918 | 442 | 1705 | 388 | 1492 | 333 | 1279 | 279 | 1066 | 225 | 853 | 194 | 666 | 166 | 666 | 166 | 666 | 166 |
| -10 | 2171 | 546 | 1954 | 447 | 1737 | 392 | 1520 | 337 | 1302 | 282 | 1085 | 227 | 868 | 196 | 678 | 168 | 678 | 168 | 678 | 168 |
| -9 | 2183 | 549 | 1965 | 449 | 1747 | 394 | 1528 | 339 | 1310 | 283 | 1092 | 228 | 873 | 196 | 682 | 169 | 682 | 169 | 682 | 169 |
| -8 | 2195 | 551 | 1976 | 451 | 1756 | 396 | 1537 | 340 | 1317 | 284 | 1098 | 229 | 878 | 197 | 686 | 170 | 686 | 170 | 686 | 170 |
| -7 | 2208 | 554 | 1987 | 453 | 1766 | 397 | 1545 | 341 | 1325 | 286 | 1104 | 230 | 883 | 198 | 690 | 170 | 690 | 170 | 690 | 170 |
| -6 | 2220 | 556 | 1998 | 455 | 1776 | 399 | 1554 | 343 | 1332 | 287 | 1110 | 231 | 888 | 199 | 694 | 171 | 694 | 171 | 694 | 171 |
| -5 | 2233 | 558 | 2009 | 457 | 1786 | 401 | 1563 | 344 | 1340 | 288 | 1116 | 232 | 893 | 200 | 698 | 172 | 698 | 172 | 698 | 172 |
| -4 | 2245 | 561 | 2020 | 459 | 1796 | 402 | 1571 | 346 | 1347 | 289 | 1122 | 233 | 898 | 201 | 702 | 173 | 702 | 173 | 702 | 173 |
| -3 | 2257 | 563 | 2031 | 461 | 1806 | 404 | 1580 | 347 | 1354 | 291 | 1129 | 234 | 903 | 202 | 705 | 173 | 705 | 173 | 705 | 173 |
| -2 | 2270 | 566 | 2043 | 463 | 1816 | 406 | 1589 | 349 | 1362 | 292 | 1135 | 235 | 908 | 202 | 709 | 174 | 709 | 174 | 709 | 174 |
| -1 | 2282 | 568 | 2054 | 465 | 1825 | 408 | 1597 | 350 | 1369 | 293 | 1141 | 236 | 913 | 203 | 713 | 175 | 713 | 175 | 713 | 175 |
| 0 | 2294 | 570 | 2065 | 467 | 1835 | 409 | 1606 | 352 | 1377 | 294 | 1147 | 237 | 918 | 204 | 717 | 176 | 717 | 176 | 717 | 176 |
| 1 | 2307 | 573 | 2076 | 469 | 1845 | 411 | 1615 | 353 | 1384 | 296 | 1153 | 238 | 923 | 205 | 721 | 176 | 721 | 176 | 721 | 176 |
| 2 | 2319 | 575 | 2087 | 471 | 1855 | 413 | 1623 | 355 | 1391 | 297 | 1159 | 239 | 928 | 206 | 725 | 177 | 725 | 177 | 725 | 177 |
| 3 | 2357 | 583 | 2121 | 477 | 1885 | 418 | 1650 | 360 | 1414 | 301 | 1178 | 242 | 943 | 209 | 737 | 179 | 737 | 179 | 737 | 179 |
| 4 | 2395 | 591 | 2155 | 483 | 1916 | 424 | 1676 | 364 | 1437 | 305 | 1197 | 245 | 958 | 211 | 748 | 182 | 748 | 182 | 748 | 182 |
| 5 | 2433 | 598 | 2190 | 490 | 1946 | 429 | 1703 | 369 | 1460 | 309 | 1216 | 249 | 973 | 214 | 760 | 184 | 760 | 184 | 760 | 184 |
| 6 | 3117 | 640 | 2806 | 524 | 2494 | 459 | 2182 | 395 | 1870 | 330 | 1559 | 266 | 1247 | 229 | 974 | 197 | 974 | 197 | 974 | 197 |
| **7** | **3200** | **650** | **2880** | **532** | **2560** | **466** | **2240** | **401** | **1920** | **335** | **1600** | **270** | **1280** | **233** | **1000** | **200** | **1000** | **200** | **1000** | **200** |
| 8 | 3283 | 660 | 2954 | 540 | 2626 | 474 | 2298 | 407 | 1970 | 341 | 1641 | 274 | 1313 | 236 | 1026 | 203 | 1026 | 203 | 1026 | 203 |
| 9 | 3365 | 670 | 3029 | 548 | 2692 | 481 | 2356 | 413 | 2019 | 346 | 1683 | 278 | 1346 | 240 | 1052 | 206 | 1052 | 206 | 1052 | 206 |
| 10 | 3448 | 680 | 3103 | 557 | 2758 | 488 | 2413 | 420 | 2069 | 351 | 1724 | 283 | 1379 | 243 | 1077 | 209 | 1077 | 209 | 1077 | 209 |
| 11 | 3530 | 690 | 3177 | 565 | 2824 | 495 | 2471 | 426 | 2118 | 356 | 1765 | 287 | 1412 | 247 | 1103 | 212 | 1103 | 212 | 1103 | 212 |
| 12 | 3613 | 700 | 3252 | 573 | 2890 | 502 | 2529 | 432 | 2168 | 361 | 1806 | 291 | 1445 | 251 | 1129 | 215 | 1129 | 215 | 1129 | 215 |
| 13 | 3695 | 710 | 3326 | 581 | 2956 | 510 | 2587 | 438 | 2217 | 367 | 1848 | 295 | 1478 | 254 | 1155 | 219 | 1155 | 219 | 1155 | 219 |
| 14 | 3778 | 720 | 3400 | 589 | 3022 | 517 | 2645 | 444 | 2267 | 372 | 1889 | 299 | 1511 | 258 | 1181 | 222 | 1181 | 222 | 1181 | 222 |
| 15 | 3861 | 731 | 3475 | 598 | 3089 | 524 | 2702 | 451 | 2316 | 377 | 1930 | 303 | 1544 | 261 | 1206 | 225 | 1206 | 225 | 1206 | 225 |
| 16 | 3943 | 741 | 3549 | 606 | 3155 | 531 | 2760 | 457 | 2366 | 382 | 1972 | 308 | 1577 | 265 | 1232 | 228 | 1232 | 228 | 1232 | 228 |
| 17 | 4026 | 751 | 3623 | 614 | 3221 | 539 | 2818 | 463 | 2415 | 387 | 2013 | 312 | 1610 | 269 | 1258 | 231 | 1258 | 231 | 1258 | 231 |
| 18 | 4108 | 761 | 3698 | 622 | 3287 | 546 | 2876 | 469 | 2465 | 393 | 2054 | 316 | 1643 | 272 | 1284 | 234 | 1284 | 234 | 1284 | 234 |
| 19 | 4191 | 771 | 3772 | 631 | 3353 | 553 | 2934 | 475 | 2515 | 398 | 2095 | 320 | 1676 | 276 | 1310 | 237 | 1310 | 237 | 1310 | 237 |
| 20 | 4274 | 781 | 3846 | 639 | 3419 | 560 | 2991 | 482 | 2564 | 403 | 2137 | 324 | 1709 | 280 | 1335 | 240 | 1335 | 240 | 1335 | 240 |
| 21 | 4356 | 791 | 3921 | 647 | 3485 | 567 | 3049 | 488 | 2614 | 408 | 2178 | 329 | 1742 | 283 | 1361 | 243 | 1361 | 243 | 1361 | 243 |
| 22 | 4439 | 801 | 3995 | 655 | 3551 | 575 | 3107 | 494 | 2663 | 413 | 2219 | 333 | 1775 | 287 | 1387 | 246 | 1387 | 246 | 1387 | 246 |
| 23 | 4521 | 811 | 4069 | 664 | 3617 | 582 | 3165 | 500 | 2713 | 419 | 2261 | 337 | 1809 | 290 | 1413 | 250 | 1413 | 250 | 1413 | 250 |
| 24 | 4604 | 821 | 4143 | 672 | 3683 | 589 | 3223 | 506 | 2762 | 424 | 2302 | 341 | 1842 | 294 | 1439 | 253 | 1439 | 253 | 1439 | 253 |

Sigle Split Type

Indoor: RAS-B35P2KVSG(B)-ND
Outdoor: RAS-35P2AVSG-ND

| Operation range | | Cooling | | Heating | |
|---|---|---|---|---|---|
| | | Q | P | Q | P |
| MINIMUM | W | 1100 | 260 | 1000 | 200 |
| RATING | W | 3500 | 850 | 4200 | 920 |
| MAXIMUM | W | 5200 | 1540 | 7800 | 2500 |

**Cooling**

| Outdoor Temperature | Parts Load (%) | | | | | | | | | | | | | | | | | | | |
|---|---|---|---|---|---|---|---|---|---|---|---|---|---|---|---|---|---|---|---|---|
| | 100 | | 90 | | 80 | | 70 | | 60 | | 50 | | 40 | | 30 | | 20 | | 10 | |
| DB (°C) | Q | P | Q | P | Q | P | Q | P | Q | P | Q | P | Q | P | Q | P | Q | P | Q | P |
| 20 | 4174 | 667 | 3756 | 568 | 3339 | 501 | 2922 | 433 | 2504 | 366 | 2087 | 298 | 1670 | 248 | 1312 | 204 | 1312 | 204 | 1312 | 204 |
| 21 | 4129 | 679 | 3716 | 579 | 3303 | 510 | 2890 | 441 | 2477 | 373 | 2064 | 304 | 1652 | 252 | 1298 | 208 | 1298 | 208 | 1298 | 208 |
| 22 | 4084 | 692 | 3676 | 589 | 3267 | 519 | 2859 | 449 | 2450 | 379 | 2042 | 309 | 1634 | 257 | 1284 | 212 | 1284 | 212 | 1284 | 212 |
| 23 | 4039 | 704 | 3635 | 600 | 3231 | 528 | 2827 | 457 | 2423 | 386 | 2020 | 315 | 1616 | 261 | 1269 | 215 | 1269 | 215 | 1269 | 215 |
| 24 | 3994 | 716 | 3595 | 610 | 3195 | 538 | 2796 | 465 | 2396 | 393 | 1997 | 320 | 1598 | 266 | 1255 | 219 | 1255 | 219 | 1255 | 219 |
| 25 | 3949 | 728 | 3554 | 620 | 3159 | 547 | 2764 | 473 | 2370 | 399 | 1975 | 326 | 1580 | 270 | 1241 | 223 | 1241 | 223 | 1241 | 223 |
| 26 | 3904 | 740 | 3514 | 631 | 3123 | 556 | 2733 | 481 | 2343 | 406 | 1952 | 331 | 1562 | 275 | 1227 | 226 | 1227 | 226 | 1227 | 226 |
| 27 | 3859 | 753 | 3473 | 641 | 3087 | 565 | 2702 | 489 | 2316 | 413 | 1930 | 336 | 1544 | 279 | 1213 | 230 | 1213 | 230 | 1213 | 230 |
| 28 | 3814 | 765 | 3433 | 652 | 3052 | 574 | 2670 | 497 | 2289 | 419 | 1907 | 342 | 1526 | 284 | 1199 | 234 | 1199 | 234 | 1199 | 234 |
| 29 | 3770 | 777 | 3393 | 662 | 3016 | 583 | 2639 | 505 | 2262 | 426 | 1885 | 347 | 1508 | 288 | 1185 | 238 | 1185 | 238 | 1185 | 238 |
| 30 | 3725 | 789 | 3352 | 672 | 2980 | 592 | 2607 | 513 | 2235 | 433 | 1862 | 353 | 1490 | 293 | 1171 | 241 | 1171 | 241 | 1171 | 241 |
| 31 | 3680 | 801 | 3312 | 683 | 2944 | 602 | 2576 | 520 | 2208 | 439 | 1840 | 358 | 1472 | 297 | 1156 | 245 | 1156 | 245 | 1156 | 245 |
| 32 | 3635 | 813 | 3271 | 693 | 2908 | 611 | 2544 | 528 | 2181 | 446 | 1817 | 364 | 1454 | 302 | 1142 | 249 | 1142 | 249 | 1142 | 249 |
| 33 | 3590 | 826 | 3231 | 703 | 2872 | 620 | 2513 | 536 | 2154 | 453 | 1795 | 369 | 1436 | 306 | 1128 | 253 | 1128 | 253 | 1128 | 253 |
| 34 | 3545 | 838 | 3190 | 714 | 2836 | 629 | 2481 | 544 | 2127 | 459 | 1772 | 375 | 1418 | 311 | 1114 | 256 | 1114 | 256 | 1114 | 256 |
| **35** | **3500** | **850** | **3150** | **724** | **2800** | **638** | **2450** | **552** | **2100** | **466** | **1750** | **380** | **1400** | **315** | **1100** | **260** | **1100** | **260** | **1100** | **260** |
| 36 | 3455 | 862 | 3110 | 735 | 2764 | 647 | 2419 | 560 | 2073 | 473 | 1728 | 385 | 1382 | 320 | 1086 | 264 | 1086 | 264 | 1086 | 264 |
| 37 | 3410 | 874 | 3069 | 745 | 2728 | 656 | 2387 | 568 | 2046 | 479 | 1705 | 391 | 1364 | 324 | 1072 | 267 | 1072 | 267 | 1072 | 267 |
| 38 | 3365 | 887 | 3029 | 755 | 2692 | 666 | 2356 | 576 | 2019 | 486 | 1683 | 396 | 1346 | 329 | 1058 | 271 | 1058 | 271 | 1058 | 271 |
| 39 | 3320 | 899 | 2988 | 766 | 2656 | 675 | 2324 | 584 | 1992 | 493 | 1660 | 402 | 1328 | 333 | 1044 | 275 | 1044 | 275 | 1044 | 275 |
| 40 | 3275 | 911 | 2948 | 776 | 2620 | 684 | 2293 | 592 | 1965 | 499 | 1638 | 407 | 1310 | 338 | 1029 | 279 | 1029 | 279 | 1029 | 279 |
| 41 | 3231 | 923 | 2907 | 786 | 2584 | 693 | 2261 | 600 | 1938 | 506 | 1615 | 413 | 1292 | 343 | 1015 | 282 | 1015 | 282 | 1015 | 282 |
| 42 | 3186 | 935 | 2867 | 797 | 2548 | 702 | 2230 | 607 | 1911 | 513 | 1593 | 418 | 1274 | 347 | 1001 | 286 | 1001 | 286 | 1001 | 286 |
| 43 | 3141 | 947 | 2827 | 807 | 2513 | 711 | 2198 | 615 | 1884 | 519 | 1570 | 424 | 1256 | 352 | 987 | 290 | 987 | 290 | 987 | 290 |
| 44 | 3096 | 960 | 2786 | 818 | 2477 | 720 | 2167 | 623 | 1857 | 526 | 1548 | 429 | 1238 | 356 | 973 | 294 | 973 | 294 | 973 | 294 |
| 45 | 3051 | 972 | 2746 | 828 | 2441 | 730 | 2136 | 631 | 1831 | 533 | 1525 | 434 | 1220 | 361 | 959 | 297 | 959 | 297 | 959 | 297 |
| 46 | 3006 | 984 | 2705 | 838 | 2405 | 739 | 2104 | 639 | 1804 | 540 | 1503 | 440 | 1202 | 365 | 945 | 301 | 945 | 301 | 945 | 301 |

**Heating**

| Outdoor Temperature | Parts Load (%) | | | | | | | | | | | | | | | | | | | |
|---|---|---|---|---|---|---|---|---|---|---|---|---|---|---|---|---|---|---|---|---|
| | 100 | | 90 | | 80 | | 70 | | 60 | | 50 | | 40 | | 30 | | 20 | | 10 | |
| DB (°C) | Q | P | Q | P | Q | P | Q | P | Q | P | Q | P | Q | P | Q | P | Q | P | Q | P |
| -30 | 1549 | 520 | 1394 | 367 | 1240 | 313 | 1085 | 260 | 930 | 206 | 775 | 153 | 620 | 138 | 465 | 122 | 369 | 113 | 369 | 113 |
| -29 | 1627 | 537 | 1464 | 378 | 1302 | 323 | 1139 | 268 | 976 | 213 | 813 | 157 | 651 | 142 | 488 | 126 | 387 | 117 | 387 | 117 |
| -28 | 1704 | 553 | 1534 | 389 | 1363 | 333 | 1193 | 276 | 1023 | 219 | 852 | 162 | 682 | 146 | 511 | 130 | 406 | 120 | 406 | 120 |
| -27 | 1782 | 569 | 1604 | 401 | 1425 | 342 | 1247 | 284 | 1069 | 226 | 891 | 167 | 713 | 151 | 535 | 134 | 424 | 124 | 424 | 124 |
| -26 | 1859 | 585 | 1673 | 412 | 1487 | 352 | 1302 | 292 | 1116 | 232 | 930 | 172 | 744 | 155 | 558 | 138 | 443 | 127 | 443 | 127 |
| -25 | 1937 | 602 | 1743 | 424 | 1549 | 362 | 1356 | 300 | 1162 | 238 | 968 | 177 | 775 | 159 | 581 | 142 | 461 | 131 | 461 | 131 |
| -24 | 1992 | 609 | 1793 | 429 | 1594 | 366 | 1394 | 304 | 1195 | 241 | 996 | 179 | 797 | 161 | 598 | 143 | 474 | 132 | 474 | 132 |
| -23 | 2047 | 616 | 1843 | 434 | 1638 | 371 | 1433 | 307 | 1228 | 244 | 1024 | 181 | 819 | 163 | 614 | 145 | 487 | 134 | 487 | 134 |
| -22 | 2103 | 623 | 1892 | 439 | 1682 | 375 | 1472 | 311 | 1262 | 247 | 1051 | 183 | 841 | 165 | 631 | 147 | 501 | 135 | 501 | 135 |
| -21 | 2158 | 630 | 1942 | 444 | 1726 | 379 | 1511 | 314 | 1295 | 250 | 1079 | 185 | 863 | 167 | 647 | 148 | 514 | 137 | 514 | 137 |
| -20 | 2213 | 637 | 1992 | 449 | 1771 | 383 | 1549 | 318 | 1328 | 252 | 1107 | 187 | 885 | 168 | 664 | 150 | 527 | 139 | 527 | 139 |
| -19 | 2269 | 644 | 2042 | 454 | 1815 | 388 | 1588 | 321 | 1361 | 255 | 1134 | 189 | 908 | 170 | 681 | 152 | 540 | 140 | 540 | 140 |
| -18 | 2324 | 651 | 2092 | 459 | 1859 | 392 | 1627 | 325 | 1394 | 258 | 1162 | 191 | 930 | 172 | 697 | 153 | 553 | 142 | 553 | 142 |
| -17 | 2379 | 658 | 2142 | 464 | 1904 | 396 | 1666 | 328 | 1428 | 261 | 1190 | 193 | 952 | 174 | 714 | 155 | 567 | 143 | 567 | 143 |
| -16 | 2435 | 665 | 2191 | 469 | 1948 | 400 | 1704 | 332 | 1461 | 264 | 1217 | 195 | 974 | 176 | 730 | 157 | 580 | 145 | 580 | 145 |
| -15 | 2490 | 673 | 2241 | 474 | 1992 | 405 | 1743 | 336 | 1494 | 266 | 1245 | 197 | 996 | 178 | 747 | 158 | 593 | 146 | 593 | 146 |
| -14 | 2545 | 687 | 2291 | 484 | 2036 | 413 | 1782 | 343 | 1527 | 272 | 1273 | 202 | 1018 | 182 | 764 | 162 | 606 | 149 | 606 | 149 |
| -13 | 2601 | 701 | 2341 | 494 | 2081 | 422 | 1821 | 350 | 1560 | 278 | 1300 | 206 | 1040 | 185 | 780 | 165 | 619 | 152 | 619 | 152 |
| -12 | 2656 | 715 | 2391 | 504 | 2125 | 430 | 1859 | 357 | 1594 | 283 | 1328 | 210 | 1062 | 189 | 797 | 168 | 632 | 155 | 632 | 155 |
| -11 | 2711 | 729 | 2440 | 514 | 2169 | 439 | 1898 | 364 | 1627 | 289 | 1356 | 214 | 1085 | 193 | 813 | 172 | 646 | 159 | 646 | 159 |
| -10 | 2767 | 743 | 2490 | 524 | 2213 | 447 | 1937 | 371 | 1660 | 295 | 1383 | 218 | 1107 | 197 | 830 | 175 | 659 | 162 | 659 | 162 |
| -9 | 2790 | 749 | 2511 | 528 | 2232 | 451 | 1953 | 374 | 1674 | 297 | 1395 | 220 | 1116 | 198 | 837 | 176 | 664 | 163 | 664 | 163 |
| -8 | 2813 | 755 | 2532 | 532 | 2250 | 454 | 1969 | 377 | 1688 | 299 | 1406 | 222 | 1125 | 200 | 844 | 178 | 670 | 164 | 670 | 164 |
| -7 | 2836 | 761 | 2552 | 536 | 2269 | 458 | 1985 | 380 | 1702 | 302 | 1418 | 223 | 1134 | 201 | 851 | 179 | 675 | 165 | 675 | 165 |
| -6 | 2859 | 767 | 2573 | 540 | 2287 | 461 | 2001 | 383 | 1715 | 304 | 1430 | 225 | 1144 | 203 | 858 | 181 | 681 | 167 | 681 | 167 |
| -5 | 2882 | 773 | 2594 | 544 | 2306 | 465 | 2017 | 386 | 1729 | 306 | 1441 | 227 | 1153 | 204 | 865 | 182 | 686 | 168 | 686 | 168 |
| -4 | 2905 | 779 | 2615 | 549 | 2324 | 469 | 2034 | 389 | 1743 | 309 | 1453 | 229 | 1162 | 206 | 872 | 183 | 692 | 169 | 692 | 169 |
| -3 | 2928 | 785 | 2635 | 553 | 2343 | 472 | 2050 | 391 | 1757 | 311 | 1464 | 230 | 1171 | 207 | 878 | 185 | 697 | 171 | 697 | 171 |
| -2 | 2951 | 791 | 2656 | 557 | 2361 | 476 | 2066 | 394 | 1771 | 313 | 1476 | 232 | 1181 | 209 | 885 | 186 | 703 | 172 | 703 | 172 |
| -1 | 2974 | 796 | 2677 | 561 | 2379 | 479 | 2082 | 397 | 1785 | 316 | 1487 | 234 | 1190 | 211 | 892 | 187 | 708 | 173 | 708 | 173 |
| 0 | 2997 | 802 | 2698 | 565 | 2398 | 483 | 2098 | 400 | 1798 | 318 | 1499 | 235 | 1199 | 212 | 899 | 189 | 714 | 174 | 714 | 174 |
| 1 | 3020 | 808 | 2718 | 569 | 2416 | 486 | 2114 | 403 | 1812 | 320 | 1510 | 237 | 1208 | 214 | 906 | 190 | 719 | 176 | 719 | 176 |
| 2 | 3043 | 814 | 2739 | 573 | 2435 | 490 | 2130 | 406 | 1826 | 323 | 1522 | 239 | 1217 | 215 | 913 | 192 | 725 | 177 | 725 | 177 |
| 3 | 3093 | 825 | 2784 | 581 | 2475 | 496 | 2165 | 412 | 1856 | 327 | 1547 | 242 | 1237 | 218 | 928 | 194 | 737 | 179 | 737 | 179 |
| 4 | 3143 | 836 | 2829 | 589 | 2515 | 503 | 2200 | 417 | 1886 | 331 | 1572 | 245 | 1257 | 221 | 943 | 197 | 748 | 182 | 748 | 182 |
| 5 | 3193 | 847 | 2874 | 597 | 2554 | 510 | 2235 | 423 | 1916 | 336 | 1597 | 249 | 1277 | 224 | 958 | 199 | 760 | 184 | 760 | 184 |
| 6 | 4092 | 906 | 3682 | 638 | 3273 | 545 | 2864 | 452 | 2455 | 359 | 2046 | 266 | 1637 | 240 | 1227 | 213 | 974 | 197 | 974 | 197 |
| **7** | **4200** | **920** | **3780** | **648** | **3360** | **554** | **2940** | **459** | **2520** | **365** | **2100** | **270** | **1680** | **243** | **1260** | **217** | **1000** | **200** | **1000** | **200** |
| 8 | 4308 | 934 | 3878 | 658 | 3447 | 562 | 3016 | 466 | 2585 | 370 | 2154 | 274 | 1723 | 247 | 1293 | 220 | 1026 | 203 | 1026 | 203 |
| 9 | 4417 | 948 | 3975 | 668 | 3533 | 571 | 3092 | 473 | 2650 | 376 | 2208 | 278 | 1767 | 251 | 1325 | 223 | 1052 | 206 | 1052 | 206 |
| 10 | 4525 | 963 | 4073 | 678 | 3620 | 579 | 3168 | 480 | 2715 | 381 | 2263 | 283 | 1810 | 255 | 1358 | 227 | 1077 | 209 | 1077 | 209 |
| 11 | 4634 | 977 | 4170 | 688 | 3707 | 588 | 3243 | 487 | 2780 | 387 | 2317 | 287 | 1853 | 258 | 1390 | 230 | 1103 | 212 | 1103 | 212 |
| 12 | 4742 | 991 | 4268 | 698 | 3794 | 596 | 3319 | 495 | 2845 | 393 | 2371 | 291 | 1897 | 262 | 1423 | 233 | 1129 | 215 | 1129 | 215 |
| 13 | 4850 | 1005 | 4365 | 708 | 3880 | 605 | 3395 | 502 | 2910 | 398 | 2425 | 295 | 1940 | 266 | 1455 | 237 | 1155 | 219 | 1155 | 219 |
| 14 | 4959 | 1020 | 4463 | 718 | 3967 | 613 | 3471 | 509 | 2975 | 404 | 2479 | 299 | 1983 | 270 | 1488 | 240 | 1181 | 222 | 1181 | 222 |
| 15 | 5067 | 1034 | 4560 | 728 | 4054 | 622 | 3547 | 516 | 3040 | 410 | 2534 | 303 | 2027 | 273 | 1520 | 243 | 1206 | 225 | 1206 | 225 |
| 16 | 5175 | 1048 | 4658 | 738 | 4140 | 631 | 3623 | 523 | 3105 | 415 | 2588 | 308 | 2070 | 277 | 1553 | 247 | 1232 | 228 | 1232 | 228 |
| 17 | 5284 | 1062 | 4755 | 748 | 4227 | 639 | 3699 | 530 | 3170 | 421 | 2642 | 312 | 2114 | 281 | 1585 | 250 | 1258 | 231 | 1258 | 231 |
| 18 | 5392 | 1077 | 4853 | 758 | 4314 | 648 | 3775 | 537 | 3235 | 427 | 2696 | 316 | 2157 | 285 | 1618 | 253 | 1284 | 234 | 1284 | 234 |
| 19 | 5501 | 1091 | 4951 | 768 | 4401 | 656 | 3850 | 544 | 3300 | 432 | 2750 | 320 | 2200 | 288 | 1650 | 257 | 1310 | 237 | 1310 | 237 |
| 20 | 5609 | 1105 | 5048 | 778 | 4487 | 665 | 3926 | 551 | 3365 | 438 | 2805 | 324 | 2244 | 292 | 1683 | 260 | 1335 | 240 | 1335 | 240 |
| 21 | 5717 | 1119 | 5146 | 788 | 4574 | 673 | 4002 | 558 | 3430 | 444 | 2859 | 329 | 2287 | 296 | 1715 | 263 | 1361 | 243 | 1361 | 243 |
| 22 | 5826 | 1134 | 5243 | 799 | 4661 | 682 | 4078 | 566 | 3495 | 449 | 2913 | 333 | 2330 | 300 | 1748 | 267 | 1387 | 246 | 1387 | 246 |
| 23 | 5934 | 1148 | 5341 | 809 | 4747 | 691 | 4154 | 573 | 3561 | 455 | 2967 | 337 | 2374 | 304 | 1780 | 270 | 1413 | 250 | 1413 | 250 |
| 24 | 6043 | 1162 | 5438 | 819 | 4834 | 699 | 4230 | 580 | 3626 | 460 | 3021 | 341 | 2417 | 307 | 1813 | 274 | 1439 | 253 | 1439 | 253 |

Sigle Split Type

Indoor: RAS-B50P2KVSG(B)-ND
Outdoor: RAS-50P2AVSG-ND

| Operation range | | Cooling | | Heating | |
|---|---|---|---|---|---|
| | | Q | P | Q | P |
| MINIMUM | W | 1000 | 320 | 1000 | 280 |
| RATING | W | 5000 | 1420 | 6000 | 1500 |
| MAXIMUM | W | 6500 | 2270 | 8700 | 2700 |

**Cooling**

| Outdoor Temperature | Parts Load (%) | | | | | | | | | | | | | | | | | | | |
|---|---|---|---|---|---|---|---|---|---|---|---|---|---|---|---|---|---|---|---|---|
| | 100 | | 90 | | 80 | | 70 | | 60 | | 50 | | 40 | | 30 | | 20 | | 10 | |
| DB (°C) | Q | P | Q | P | Q | P | Q | P | Q | P | Q | P | Q | P | Q | P | Q | P | Q | P |
| 20 | 5963 | 1115 | 5366 | 824 | 4770 | 716 | 4174 | 608 | 3578 | 500 | 2981 | 393 | 2385 | 345 | 1789 | 298 | 1193 | 251 | 1193 | 251 |
| 21 | 5898 | 1135 | 5309 | 839 | 4719 | 729 | 4129 | 619 | 3539 | 510 | 2949 | 400 | 2359 | 352 | 1770 | 304 | 1180 | 256 | 1180 | 256 |
| 22 | 5834 | 1155 | 5251 | 854 | 4667 | 742 | 4084 | 631 | 3501 | 519 | 2917 | 407 | 2334 | 358 | 1750 | 309 | 1167 | 260 | 1167 | 260 |
| 23 | 5770 | 1176 | 5193 | 869 | 4616 | 756 | 4039 | 642 | 3462 | 528 | 2885 | 414 | 2308 | 364 | 1731 | 315 | 1154 | 265 | 1154 | 265 |
| 24 | 5706 | 1196 | 5135 | 884 | 4565 | 769 | 3994 | 653 | 3424 | 537 | 2853 | 421 | 2282 | 371 | 1712 | 320 | 1141 | 270 | 1141 | 270 |
| 25 | 5642 | 1216 | 5078 | 900 | 4513 | 782 | 3949 | 664 | 3385 | 546 | 2821 | 428 | 2257 | 377 | 1693 | 326 | 1128 | 274 | 1128 | 274 |
| 26 | 5578 | 1237 | 5020 | 915 | 4462 | 795 | 3904 | 675 | 3347 | 555 | 2789 | 436 | 2231 | 383 | 1673 | 331 | 1116 | 279 | 1116 | 279 |
| 27 | 5513 | 1257 | 4962 | 930 | 4411 | 808 | 3859 | 686 | 3308 | 564 | 2757 | 443 | 2205 | 390 | 1654 | 336 | 1103 | 283 | 1103 | 283 |
| 28 | 5449 | 1278 | 4904 | 945 | 4359 | 821 | 3814 | 697 | 3270 | 574 | 2725 | 450 | 2180 | 396 | 1635 | 342 | 1090 | 288 | 1090 | 288 |
| 29 | 5385 | 1298 | 4847 | 960 | 4308 | 834 | 3770 | 708 | 3231 | 583 | 2693 | 457 | 2154 | 402 | 1616 | 347 | 1077 | 292 | 1077 | 292 |
| 30 | 5321 | 1318 | 4789 | 975 | 4257 | 847 | 3725 | 719 | 3193 | 592 | 2660 | 464 | 2128 | 408 | 1596 | 353 | 1064 | 297 | 1064 | 297 |
| 31 | 5257 | 1339 | 4731 | 990 | 4205 | 860 | 3680 | 731 | 3154 | 601 | 2628 | 471 | 2103 | 415 | 1577 | 358 | 1051 | 302 | 1051 | 302 |
| 32 | 5193 | 1359 | 4673 | 1005 | 4154 | 873 | 3635 | 742 | 3116 | 610 | 2596 | 479 | 2077 | 421 | 1558 | 364 | 1039 | 306 | 1039 | 306 |
| 33 | 5128 | 1379 | 4616 | 1020 | 4103 | 886 | 3590 | 753 | 3077 | 619 | 2564 | 486 | 2051 | 427 | 1539 | 369 | 1026 | 311 | 1026 | 311 |
| 34 | 5064 | 1400 | 4558 | 1035 | 4051 | 899 | 3545 | 764 | 3039 | 628 | 2532 | 493 | 2026 | 434 | 1519 | 375 | 1013 | 315 | 1013 | 315 |
| **35** | **5000** | **1420** | **4500** | **1050** | **4000** | **913** | **3500** | **775** | **3000** | **638** | **2500** | **500** | **2000** | **440** | **1500** | **380** | **1000** | **320** | **1000** | **320** |
| 36 | 4936 | 1440 | 4442 | 1065 | 3949 | 926 | 3455 | 786 | 2962 | 647 | 2468 | 507 | 1974 | 446 | 1481 | 385 | 987 | 325 | 987 | 325 |
| 37 | 4872 | 1461 | 4385 | 1080 | 3897 | 939 | 3410 | 797 | 2923 | 656 | 2436 | 514 | 1949 | 453 | 1462 | 391 | 974 | 329 | 974 | 329 |
| 38 | 4808 | 1481 | 4327 | 1095 | 3846 | 952 | 3365 | 808 | 2885 | 665 | 2404 | 522 | 1923 | 459 | 1442 | 396 | 962 | 334 | 962 | 334 |
| 39 | 4743 | 1501 | 4269 | 1110 | 3795 | 965 | 3320 | 819 | 2846 | 674 | 2372 | 529 | 1897 | 465 | 1423 | 402 | 949 | 338 | 949 | 338 |
| 40 | 4679 | 1522 | 4211 | 1125 | 3743 | 978 | 3275 | 831 | 2808 | 683 | 2340 | 536 | 1872 | 472 | 1404 | 407 | 936 | 343 | 936 | 343 |
| 41 | 4615 | 1542 | 4154 | 1140 | 3692 | 991 | 3231 | 842 | 2769 | 692 | 2308 | 543 | 1846 | 478 | 1385 | 413 | 923 | 348 | 923 | 348 |
| 42 | 4551 | 1562 | 4096 | 1155 | 3641 | 1004 | 3186 | 853 | 2731 | 701 | 2275 | 550 | 1820 | 484 | 1365 | 418 | 910 | 352 | 910 | 352 |
| 43 | 4487 | 1583 | 4038 | 1170 | 3589 | 1017 | 3141 | 864 | 2692 | 711 | 2243 | 557 | 1795 | 490 | 1346 | 424 | 897 | 357 | 897 | 357 |
| 44 | 4423 | 1603 | 3980 | 1185 | 3538 | 1030 | 3096 | 875 | 2654 | 720 | 2211 | 565 | 1769 | 497 | 1327 | 429 | 885 | 361 | 885 | 361 |
| 45 | 4358 | 1624 | 3923 | 1201 | 3487 | 1043 | 3051 | 886 | 2615 | 729 | 2179 | 572 | 1743 | 503 | 1308 | 434 | 872 | 366 | 872 | 366 |
| 46 | 4294 | 1644 | 3865 | 1216 | 3435 | 1056 | 3006 | 897 | 2577 | 738 | 2147 | 579 | 1718 | 509 | 1288 | 440 | 859 | 370 | 859 | 370 |

**Heating**

| Outdoor Temperature | Parts Load (%) | | | | | | | | | | | | | | | | | | | |
|---|---|---|---|---|---|---|---|---|---|---|---|---|---|---|---|---|---|---|---|---|
| | 100 | | 90 | | 80 | | 70 | | 60 | | 50 | | 40 | | 30 | | 20 | | 10 | |
| DB (°C) | Q | P | Q | P | Q | P | Q | P | Q | P | Q | P | Q | P | Q | P | Q | P | Q | P |
| -30 | 2657 | 1195 | 2391 | 944 | 2126 | 828 | 1860 | 711 | 1594 | 594 | 1329 | 478 | 1063 | 401 | 797 | 325 | 531 | 248 | 443 | 223 |
| -29 | 2742 | 1198 | 2467 | 947 | 2193 | 830 | 1919 | 713 | 1645 | 596 | 1371 | 479 | 1097 | 402 | 822 | 326 | 548 | 249 | 457 | 224 |
| -28 | 2826 | 1200 | 2543 | 949 | 2261 | 832 | 1978 | 714 | 1696 | 597 | 1413 | 480 | 1130 | 403 | 848 | 327 | 565 | 250 | 471 | 224 |
| -27 | 2911 | 1203 | 2620 | 951 | 2329 | 834 | 2037 | 716 | 1746 | 599 | 1455 | 481 | 1164 | 404 | 873 | 327 | 582 | 250 | 485 | 225 |
| -26 | 2995 | 1206 | 2696 | 953 | 2396 | 836 | 2097 | 718 | 1797 | 600 | 1498 | 482 | 1198 | 405 | 899 | 328 | 599 | 251 | 499 | 225 |
| -25 | 3080 | 1209 | 2772 | 956 | 2464 | 838 | 2156 | 720 | 1848 | 602 | 1540 | 484 | 1232 | 406 | 924 | 329 | 616 | 251 | 513 | 226 |
| -24 | 3164 | 1214 | 2848 | 959 | 2531 | 841 | 2215 | 722 | 1899 | 604 | 1582 | 485 | 1266 | 408 | 949 | 330 | 633 | 252 | 527 | 227 |
| -23 | 3249 | 1218 | 2924 | 963 | 2599 | 844 | 2274 | 725 | 1949 | 606 | 1624 | 487 | 1300 | 409 | 975 | 331 | 650 | 253 | 541 | 227 |
| -22 | 3333 | 1223 | 3000 | 967 | 2667 | 847 | 2333 | 728 | 2000 | 609 | 1667 | 489 | 1333 | 411 | 1000 | 333 | 667 | 254 | 556 | 228 |
| -21 | 3418 | 1228 | 3076 | 971 | 2734 | 851 | 2393 | 731 | 2051 | 611 | 1709 | 491 | 1367 | 413 | 1025 | 334 | 684 | 255 | 570 | 229 |
| -20 | 3502 | 1233 | 3152 | 974 | 2802 | 854 | 2452 | 734 | 2101 | 613 | 1751 | 493 | 1401 | 414 | 1051 | 335 | 700 | 256 | 584 | 230 |
| -19 | 3587 | 1237 | 3228 | 978 | 2870 | 857 | 2511 | 736 | 2152 | 616 | 1793 | 495 | 1435 | 416 | 1076 | 337 | 717 | 257 | 598 | 231 |
| -18 | 3671 | 1242 | 3304 | 982 | 2937 | 861 | 2570 | 739 | 2203 | 618 | 1836 | 497 | 1469 | 417 | 1101 | 338 | 734 | 258 | 612 | 232 |
| -17 | 3756 | 1247 | 3380 | 986 | 3005 | 864 | 2629 | 742 | 2254 | 620 | 1878 | 499 | 1502 | 419 | 1127 | 339 | 751 | 259 | 626 | 233 |
| -16 | 3841 | 1252 | 3457 | 989 | 3072 | 867 | 2688 | 745 | 2304 | 623 | 1920 | 501 | 1536 | 421 | 1152 | 340 | 768 | 260 | 640 | 234 |
| -15 | 3925 | 1256 | 3533 | 993 | 3140 | 870 | 2748 | 748 | 2355 | 625 | 1963 | 503 | 1570 | 422 | 1178 | 342 | 785 | 261 | 654 | 235 |
| -14 | 3961 | 1261 | 3565 | 997 | 3169 | 874 | 2773 | 751 | 2377 | 628 | 1981 | 504 | 1585 | 424 | 1188 | 343 | 792 | 262 | 660 | 235 |
| -13 | 3998 | 1266 | 3598 | 1000 | 3198 | 877 | 2798 | 753 | 2399 | 630 | 1999 | 506 | 1599 | 425 | 1199 | 344 | 800 | 263 | 666 | 236 |
| -12 | 4034 | 1271 | 3630 | 1004 | 3227 | 880 | 2824 | 756 | 2420 | 632 | 2017 | 508 | 1614 | 427 | 1210 | 346 | 807 | 264 | 672 | 237 |
| -11 | 4070 | 1275 | 3663 | 1008 | 3256 | 884 | 2849 | 759 | 2442 | 635 | 2035 | 510 | 1628 | 428 | 1221 | 347 | 814 | 265 | 678 | 238 |
| -10 | 4106 | 1280 | 3696 | 1012 | 3285 | 887 | 2874 | 762 | 2464 | 637 | 2053 | 512 | 1643 | 430 | 1232 | 348 | 821 | 266 | 684 | 239 |
| -9 | 4126 | 1284 | 3714 | 1015 | 3301 | 890 | 2888 | 764 | 2476 | 639 | 2063 | 514 | 1651 | 431 | 1238 | 349 | 825 | 267 | 688 | 240 |
| -8 | 4147 | 1288 | 3732 | 1018 | 3317 | 892 | 2903 | 767 | 2488 | 641 | 2073 | 515 | 1659 | 433 | 1244 | 350 | 829 | 268 | 691 | 240 |
| -7 | 4167 | 1292 | 3750 | 1021 | 3333 | 895 | 2917 | 769 | 2500 | 643 | 2083 | 517 | 1667 | 434 | 1250 | 351 | 833 | 269 | 694 | 241 |
| -6 | 4187 | 1296 | 3768 | 1024 | 3349 | 898 | 2931 | 771 | 2512 | 645 | 2093 | 518 | 1675 | 435 | 1256 | 352 | 837 | 270 | 698 | 242 |
| -5 | 4207 | 1300 | 3786 | 1027 | 3366 | 900 | 2945 | 774 | 2524 | 647 | 2103 | 520 | 1683 | 437 | 1262 | 354 | 841 | 270 | 701 | 243 |
| -4 | 4227 | 1304 | 3804 | 1030 | 3382 | 903 | 2959 | 776 | 2536 | 649 | 2114 | 521 | 1691 | 438 | 1268 | 355 | 845 | 271 | 705 | 243 |
| -3 | 4247 | 1308 | 3822 | 1034 | 3398 | 906 | 2973 | 778 | 2548 | 651 | 2124 | 523 | 1699 | 439 | 1274 | 356 | 849 | 272 | 708 | 244 |
| -2 | 4267 | 1312 | 3841 | 1037 | 3414 | 909 | 2987 | 781 | 2560 | 653 | 2134 | 525 | 1707 | 441 | 1280 | 357 | 853 | 273 | 711 | 245 |
| -1 | 4287 | 1316 | 3859 | 1040 | 3430 | 911 | 3001 | 783 | 2572 | 655 | 2144 | 526 | 1715 | 442 | 1286 | 358 | 857 | 274 | 715 | 246 |
| 0 | 4308 | 1320 | 3877 | 1043 | 3446 | 914 | 3015 | 785 | 2585 | 657 | 2154 | 528 | 1723 | 443 | 1292 | 359 | 862 | 274 | 718 | 246 |
| 1 | 4328 | 1323 | 3895 | 1046 | 3462 | 917 | 3029 | 788 | 2597 | 659 | 2164 | 529 | 1731 | 445 | 1298 | 360 | 866 | 275 | 721 | 247 |
| 2 | 4348 | 1327 | 3913 | 1049 | 3478 | 920 | 3043 | 790 | 2609 | 661 | 2174 | 531 | 1739 | 446 | 1304 | 361 | 870 | 276 | 725 | 248 |
| 3 | 4419 | 1345 | 3977 | 1063 | 3535 | 932 | 3093 | 801 | 2651 | 669 | 2210 | 538 | 1768 | 452 | 1326 | 366 | 884 | 280 | 737 | 251 |
| 4 | 4490 | 1363 | 4041 | 1077 | 3592 | 944 | 3143 | 811 | 2694 | 678 | 2245 | 545 | 1796 | 458 | 1347 | 371 | 898 | 284 | 748 | 254 |
| 5 | 4561 | 1381 | 4105 | 1092 | 3649 | 957 | 3193 | 822 | 2737 | 687 | 2281 | 552 | 1825 | 464 | 1368 | 376 | 912 | 287 | 760 | 258 |
| 6 | 5845 | 1477 | 5261 | 1167 | 4676 | 1023 | 4092 | 879 | 3507 | 735 | 2923 | 591 | 2338 | 496 | 1754 | 402 | 1169 | 307 | 974 | 276 |
| **7** | **6000** | **1500** | **5400** | **1186** | **4800** | **1039** | **4200** | **893** | **3600** | **746** | **3000** | **600** | **2400** | **504** | **1800** | **408** | **1200** | **312** | **1000** | **280** |
| 8 | 6155 | 1523 | 5539 | 1204 | 4924 | 1055 | 4308 | 907 | 3693 | 758 | 3077 | 609 | 2462 | 512 | 1846 | 414 | 1231 | 317 | 1026 | 284 |
| 9 | 6310 | 1546 | 5679 | 1222 | 5048 | 1071 | 4417 | 920 | 3786 | 770 | 3155 | 619 | 2524 | 520 | 1893 | 421 | 1262 | 322 | 1052 | 289 |
| 10 | 6465 | 1570 | 5818 | 1241 | 5172 | 1087 | 4525 | 934 | 3879 | 781 | 3232 | 628 | 2586 | 527 | 1939 | 427 | 1293 | 326 | 1077 | 293 |
| 11 | 6619 | 1593 | 5957 | 1259 | 5295 | 1104 | 4634 | 948 | 3972 | 793 | 3310 | 637 | 2648 | 535 | 1986 | 433 | 1324 | 331 | 1103 | 297 |
| 12 | 6774 | 1616 | 6097 | 1277 | 5419 | 1120 | 4742 | 962 | 4065 | 804 | 3387 | 646 | 2710 | 543 | 2032 | 440 | 1355 | 336 | 1129 | 302 |
| 13 | 6929 | 1639 | 6236 | 1296 | 5543 | 1136 | 4850 | 976 | 4157 | 816 | 3465 | 656 | 2772 | 551 | 2079 | 446 | 1386 | 341 | 1155 | 306 |
| 14 | 7084 | 1663 | 6375 | 1314 | 5667 | 1152 | 4959 | 990 | 4250 | 827 | 3542 | 665 | 2834 | 559 | 2125 | 452 | 1417 | 346 | 1181 | 310 |
| 15 | 7239 | 1686 | 6515 | 1332 | 5791 | 1168 | 5067 | 1003 | 4343 | 839 | 3619 | 674 | 2895 | 566 | 2172 | 459 | 1448 | 351 | 1206 | 315 |
| 16 | 7394 | 1709 | 6654 | 1351 | 5915 | 1184 | 5175 | 1017 | 4436 | 850 | 3697 | 684 | 2957 | 574 | 2218 | 465 | 1479 | 355 | 1232 | 319 |
| 17 | 7548 | 1732 | 6794 | 1369 | 6039 | 1200 | 5284 | 1031 | 4529 | 862 | 3774 | 693 | 3019 | 582 | 2265 | 471 | 1510 | 360 | 1258 | 323 |
| 18 | 7703 | 1755 | 6933 | 1388 | 6163 | 1216 | 5392 | 1045 | 4622 | 874 | 3852 | 702 | 3081 | 590 | 2311 | 477 | 1541 | 365 | 1284 | 328 |
| 19 | 7858 | 1779 | 7072 | 1406 | 6286 | 1232 | 5501 | 1059 | 4715 | 885 | 3929 | 711 | 3143 | 598 | 2357 | 484 | 1572 | 370 | 1310 | 332 |
| 20 | 8013 | 1802 | 7212 | 1424 | 6410 | 1248 | 5609 | 1073 | 4808 | 897 | 4006 | 721 | 3205 | 605 | 2404 | 490 | 1603 | 375 | 1335 | 336 |
| 21 | 8168 | 1825 | 7351 | 1443 | 6534 | 1264 | 5717 | 1086 | 4901 | 908 | 4084 | 730 | 3267 | 613 | 2450 | 496 | 1634 | 380 | 1361 | 341 |
| 22 | 8323 | 1848 | 7490 | 1461 | 6658 | 1281 | 5826 | 1100 | 4994 | 920 | 4161 | 739 | 3329 | 621 | 2497 | 503 | 1665 | 384 | 1387 | 345 |
| 23 | 8477 | 1872 | 7630 | 1479 | 6782 | 1297 | 5934 | 1114 | 5086 | 931 | 4239 | 749 | 3391 | 629 | 2543 | 509 | 1695 | 389 | 1413 | 349 |
| 24 | 8632 | 1895 | 7769 | 1498 | 6906 | 1313 | 6043 | 1128 | 5179 | 943 | 4316 | 758 | 3453 | 637 | 2590 | 515 | 1726 | 394 | 1439 | 354 |

# 10. Performance Characteristic

**Model : RAS-B25P2KVSG(B)-ND/RAS-25P2AVSG-ND**

**Product specification :**

| Condition | | Capacity (kW) | Power (kW) | EER/COP |
|---|---|---|---|---|
| Cooling JIS | Min | 1.00 | 0.24 | 4.17 |
| In: 27°C DB/19°C WB | Rated | 2.80 | 0.63 | 4.44 |
| Out: 35°C DB/24°C WB | Max | 4.40 | 1.15 | 3.83 |
| Heating JIS | Min | 1.00 | 0.20 | 5.00 |
| In: 20°C DB/15°C WB | Rated | 3.20 | 0.65 | 4.92 |
| Out: 7°C DB/6°C WB | Max | 7.40 | 2.40 | 3.08 |
| Heating Low Temp. In: 20°C DB/15°C WB Out: 2°C DB/1°C WB | Max | 4.70 | 2.00 | 2.35 |
| Heating Low Temp. In: 20°C DB/15°C WB Out: -10°C DB | Max | 4.40 | 1.90 | 2.32 |
| Heating Low Temp. In: 20°C DB/15°C WB Out: -15°C DB | Max | 4.00 | 1.80 | 2.22 |
| Heating Low Temp. In: 20°C DB/15°C WB Out: -20°C DB | Max | 3.40 | 1.600 | 2.13 |
| Heating Low Temp. In: 20°C DB/15°C WB Out: -25°C DB | Max | 2.90 | 1.460 | 1.99 |
| Heating Low Temp. In: 20°C DB/15°C WB Out: -30°C DB | Max | 2.40 | 1.300 | 1.85 |

**Cooling performance characteristic :**

| Outside Temp | Min capacity | | | Nominal capacity | | | Max capacity | | |
|---|---|---|---|---|---|---|---|---|---|
| | Capacity | Power | EER | Capacity | Power | EER | Capacity | Power | EER |
| (°C) | (kW) | (kW) | ( - ) | (kW) | (kW) | ( - ) | (kW) | (kW) | ( - ) |
| 20 | 1.19 | 0.19 | 6.33 | 3.34 | 0.49 | 6.75 | 5.25 | 0.90 | 5.81 |
| 21 | 1.18 | 0.19 | 6.15 | 3.30 | 0.50 | 6.56 | 5.19 | 0.92 | 5.65 |
| 22 | 1.17 | 0.20 | 5.98 | 3.27 | 0.51 | 6.37 | 5.13 | 0.94 | 5.49 |
| 23 | 1.15 | 0.20 | 5.81 | 3.23 | 0.52 | 6.19 | 5.08 | 0.95 | 5.33 |
| 24 | 1.14 | 0.20 | 5.64 | 3.20 | 0.53 | 6.02 | 5.02 | 0.97 | 5.18 |
| 25 | 1.13 | 0.21 | 5.49 | 3.16 | 0.54 | 5.85 | 4.96 | 0.99 | 5.04 |
| 26 | 1.12 | 0.21 | 5.34 | 3.12 | 0.55 | 5.69 | 4.91 | 1.00 | 4.90 |
| 27 | 1.10 | 0.21 | 5.19 | 3.09 | 0.56 | 5.54 | 4.85 | 1.02 | 4.77 |
| 28 | 1.09 | 0.22 | 5.05 | 3.05 | 0.57 | 5.38 | 4.80 | 1.03 | 4.63 |
| 29 | 1.08 | 0.22 | 4.91 | 3.02 | 0.58 | 5.24 | 4.74 | 1.05 | 4.51 |
| 30 | 1.06 | 0.22 | 4.78 | 2.98 | 0.58 | 5.09 | 4.68 | 1.07 | 4.39 |
| 31 | 1.05 | 0.23 | 4.65 | 2.94 | 0.59 | 4.96 | 4.63 | 1.08 | 4.27 |
| 32 | 1.04 | 0.23 | 4.52 | 2.91 | 0.60 | 4.82 | 4.57 | 1.10 | 4.15 |
| 33 | 1.03 | 0.23 | 4.40 | 2.87 | 0.61 | 4.69 | 4.51 | 1.12 | 4.04 |
| 34 | 1.01 | 0.24 | 4.28 | 2.84 | 0.62 | 4.57 | 4.46 | 1.13 | 3.93 |
| **35** | **1.00** | **0.24** | **4.17** | **2.80** | **0.63** | **4.44** | **4.40** | **1.15** | **3.83** |
| 36 | 0.99 | 0.24 | 4.06 | 2.76 | 0.64 | 4.33 | 4.34 | 1.17 | 3.72 |
| 37 | 0.97 | 0.25 | 3.95 | 2.73 | 0.65 | 4.21 | 4.29 | 1.18 | 3.62 |
| 38 | 0.96 | 0.25 | 3.84 | 2.69 | 0.66 | 4.10 | 4.23 | 1.20 | 3.53 |
| 39 | 0.95 | 0.25 | 3.74 | 2.66 | 0.67 | 3.99 | 4.17 | 1.22 | 3.43 |
| 40 | 0.94 | 0.26 | 3.64 | 2.62 | 0.68 | 3.88 | 4.12 | 1.23 | 3.34 |
| 41 | 0.92 | 0.26 | 3.54 | 2.58 | 0.68 | 3.78 | 4.06 | 1.25 | 3.25 |
| 42 | 0.91 | 0.26 | 3.45 | 2.55 | 0.69 | 3.68 | 4.00 | 1.27 | 3.16 |
| 43 | 0.90 | 0.27 | 3.35 | 2.51 | 0.70 | 3.58 | 3.95 | 1.28 | 3.08 |
| 44 | 0.88 | 0.27 | 3.26 | 2.48 | 0.71 | 3.48 | 3.89 | 1.30 | 3.00 |
| 45 | 0.87 | 0.27 | 3.18 | 2.44 | 0.72 | 3.39 | 3.84 | 1.31 | 2.92 |
| 46 | 0.86 | 0.28 | 3.09 | 2.40 | 0.73 | 3.30 | 3.78 | 1.33 | 2.84 |

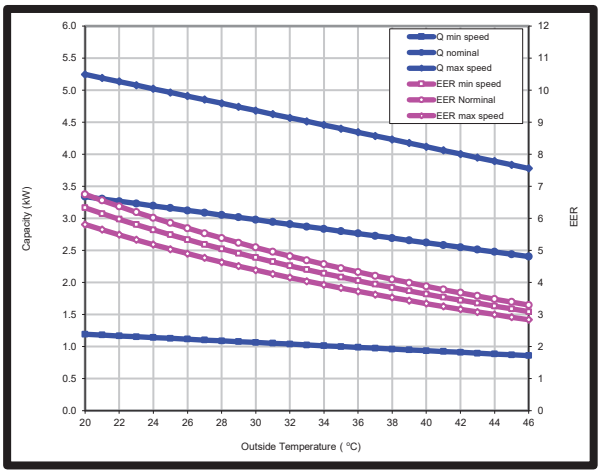


**Heating performance characteristic :**

| Outside Temp | Min capacity | | | Nominal capacity | | | Max capacity | | |
|---|---|---|---|---|---|---|---|---|---|
| | Capacity | Power | COP | Capacity | Power | COP | Capacity | Power | COP |
| (°C) | (kW) | (kW) | ( - ) | (kW) | (kW) | ( - ) | (kW) | (kW) | ( - ) |
| **-30** | **0.37** | **0.12** | **3.22** | **1.18** | **0.37** | **3.17** | **2.40** | **1.30** | **1.85** |
| -29 | 0.39 | 0.12 | 3.27 | 1.23 | 0.38 | 3.22 | 2.50 | 1.33 | 1.88 |
| -28 | 0.40 | 0.12 | 3.32 | 1.28 | 0.39 | 3.27 | 2.60 | 1.36 | 1.91 |
| -27 | 0.42 | 0.12 | 3.37 | 1.33 | 0.40 | 3.32 | 2.70 | 1.40 | 1.93 |
| -26 | 0.43 | 0.13 | 3.42 | 1.38 | 0.41 | 3.36 | 2.80 | 1.43 | 1.96 |
| **-25** | **0.45** | **0.13** | **3.46** | **1.43** | **0.42** | **3.41** | **2.90** | **1.46** | **1.99** |
| -24 | 0.46 | 0.13 | 3.51 | 1.48 | 0.43 | 3.46 | 3.00 | 1.49 | 2.02 |
| -23 | 0.48 | 0.13 | 3.56 | 1.53 | 0.44 | 3.51 | 3.10 | 1.52 | 2.04 |
| -22 | 0.49 | 0.14 | 3.61 | 1.58 | 0.44 | 3.56 | 3.20 | 1.54 | 2.07 |
| -21 | 0.51 | 0.14 | 3.66 | 1.63 | 0.45 | 3.60 | 3.30 | 1.57 | 2.10 |
| **-20** | **0.52** | **0.14** | **3.70** | **1.68** | **0.46** | **3.65** | **3.40** | **1.60** | **2.13** |
| -19 | 0.54 | 0.15 | 3.74 | 1.74 | 0.47 | 3.68 | 3.52 | 1.64 | 2.15 |
| -18 | 0.56 | 0.15 | 3.77 | 1.80 | 0.48 | 3.72 | 3.64 | 1.68 | 2.17 |
| -17 | 0.58 | 0.15 | 3.81 | 1.86 | 0.49 | 3.75 | 3.76 | 1.72 | 2.19 |
| -16 | 0.60 | 0.16 | 3.84 | 1.91 | 0.51 | 3.78 | 3.88 | 1.76 | 2.20 |
| **-15** | **0.62** | **0.16** | **3.87** | **1.97** | **0.52** | **3.81** | **4.00** | **1.80** | **2.22** |
| -14 | 0.63 | 0.16 | 3.91 | 2.01 | 0.52 | 3.85 | 4.08 | 1.82 | 2.24 |
| -13 | 0.64 | 0.16 | 3.94 | 2.05 | 0.53 | 3.88 | 4.16 | 1.84 | 2.26 |
| -12 | 0.65 | 0.16 | 3.97 | 2.09 | 0.53 | 3.91 | 4.24 | 1.86 | 2.28 |
| -11 | 0.67 | 0.17 | 4.00 | 2.13 | 0.54 | 3.94 | 4.32 | 1.88 | 2.30 |
| **-10** | **0.68** | **0.17** | **4.03** | **2.17** | **0.55** | **3.97** | **4.40** | **1.90** | **2.32** |
| -9 | 0.68 | 0.17 | 4.04 | 2.18 | 0.55 | 3.98 | 4.43 | 1.91 | 2.32 |
| -8 | 0.69 | 0.17 | 4.04 | 2.20 | 0.55 | 3.98 | 4.45 | 1.92 | 2.32 |
| -7 | 0.69 | 0.17 | 4.05 | 2.21 | 0.55 | 3.99 | 4.48 | 1.93 | 2.32 |
| -6 | 0.69 | 0.17 | 4.06 | 2.22 | 0.56 | 3.99 | 4.50 | 1.93 | 2.33 |
| -5 | 0.70 | 0.17 | 4.06 | 2.23 | 0.56 | 4.00 | 4.53 | 1.94 | 2.33 |
| -4 | 0.70 | 0.17 | 4.07 | 2.24 | 0.56 | 4.00 | 4.55 | 1.95 | 2.33 |
| -3 | 0.71 | 0.17 | 4.07 | 2.26 | 0.56 | 4.01 | 4.58 | 1.96 | 2.34 |
| -2 | 0.71 | 0.17 | 4.08 | 2.27 | 0.57 | 4.01 | 4.60 | 1.97 | 2.34 |
| -1 | 0.71 | 0.17 | 4.08 | 2.28 | 0.57 | 4.02 | 4.63 | 1.98 | 2.34 |
| 0 | 0.72 | 0.18 | 4.08 | 2.29 | 0.57 | 4.02 | 4.65 | 1.98 | 2.34 |
| 1 | 0.72 | 0.18 | 4.09 | 2.31 | 0.57 | 4.03 | 4.68 | 1.99 | 2.35 |
| **2** | **0.72** | **0.18** | **4.09** | **2.32** | **0.58** | **4.03** | **4.70** | **2.00** | **2.35** |
| 3 | 0.80 | 0.18 | 4.38 | 2.36 | 0.58 | 4.04 | 4.82 | 2.09 | 2.30 |
| 4 | 0.87 | 0.19 | 4.64 | 2.39 | 0.59 | 4.05 | 4.93 | 2.18 | 2.26 |
| 5 | 0.95 | 0.19 | 4.89 | 2.43 | 0.60 | 4.07 | 5.05 | 2.27 | 2.22 |
| 6 | 0.97 | 0.20 | 4.95 | 3.12 | 0.64 | 4.87 | 7.21 | 2.36 | 3.05 |
| **7** | **1.00** | **0.20** | **5.00** | **3.20** | **0.65** | **4.92** | **7.40** | **2.40** | **3.08** |
| 8 | 1.03 | 0.20 | 5.05 | 3.28 | 0.66 | 4.97 | 7.59 | 2.44 | 3.11 |
| 9 | 1.05 | 0.21 | 5.10 | 3.37 | 0.67 | 5.02 | 7.78 | 2.47 | 3.15 |
| 10 | 1.08 | 0.21 | 5.15 | 3.45 | 0.68 | 5.07 | 7.97 | 2.51 | 3.17 |
| 11 | 1.10 | 0.21 | 5.19 | 3.53 | 0.69 | 5.11 | 8.16 | 2.55 | 3.20 |
| 12 | 1.13 | 0.22 | 5.24 | 3.61 | 0.70 | 5.16 | 8.35 | 2.59 | 3.23 |
| 13 | 1.15 | 0.22 | 5.28 | 3.70 | 0.71 | 5.20 | 8.55 | 2.62 | 3.26 |
| 14 | 1.18 | 0.22 | 5.33 | 3.78 | 0.72 | 5.24 | 8.74 | 2.66 | 3.28 |
| 15 | 1.21 | 0.22 | 5.37 | 3.86 | 0.73 | 5.28 | 8.93 | 2.70 | 3.31 |
| 16 | 1.23 | 0.23 | 5.41 | 3.94 | 0.74 | 5.32 | 9.12 | 2.73 | 3.33 |
| 17 | 1.26 | 0.23 | 5.45 | 4.03 | 0.75 | 5.36 | 9.31 | 2.77 | 3.36 |
| 18 | 1.28 | 0.23 | 5.49 | 4.11 | 0.76 | 5.40 | 9.50 | 2.81 | 3.38 |
| 19 | 1.31 | 0.24 | 5.52 | 4.19 | 0.77 | 5.44 | 9.62 | 2.82 | 3.41 |
| 20 | 1.34 | 0.24 | 5.56 | 4.27 | 0.78 | 5.47 | 9.71 | 2.82 | 3.45 |
| 21 | 1.36 | 0.24 | 5.59 | 4.36 | 0.79 | 5.51 | 9.80 | 2.82 | 3.48 |
| 22 | 1.39 | 0.25 | 5.63 | 4.44 | 0.80 | 5.54 | 9.89 | 2.82 | 3.51 |
| 23 | 1.41 | 0.25 | 5.66 | 4.52 | 0.81 | 5.57 | 9.97 | 2.82 | 3.54 |
| 24 | 1.44 | 0.25 | 5.69 | 4.60 | 0.82 | 5.61 | 10.06 | 2.82 | 3.57 |

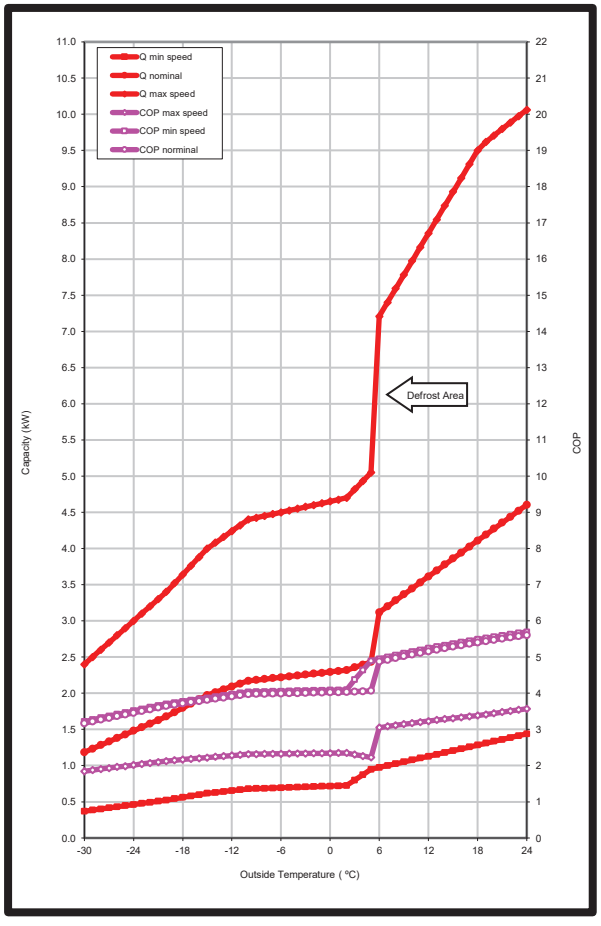

**Model : RAS-B35P2KVSG(B)-ND/RAS-35P2AVSG-ND**

**Product specification :**

| Condition | | Capacity (kW) | Power (kW) | EER/COP |
|---|---|---|---|---|
| Cooling JIS | Min | 1.10 | 0.26 | 4.23 |
| In: 27°C DB/19°C WB | Rated | 3.50 | 0.85 | 4.12 |
| Out: 35°C DB/24°C WB | Max | 5.20 | 1.54 | 3.38 |
| Heating JIS | Min | 1.00 | 0.20 | 5.00 |
| In: 20°C DB/15°C WB | Rated | 4.20 | 0.92 | 4.57 |
| Out: 7°C DB/6°C WB | Max | 7.80 | 2.50 | 3.12 |
| Heating Low Temp. In: 20°C DB/15°C WB Out: 2°C DB/1°C WB | Max | 5.50 | 2.30 | 2.39 |
| Heating Low Temp. In: 20°C DB/15°C WB Out: -10°C DB | Max | 5.00 | 2.10 | 2.38 |
| Heating Low Temp. In: 20°C DB/15°C WB Out: -15°C DB | Max | 4.50 | 1.90 | 2.37 |
| Heating Low Temp. In: 20°C DB/15°C WB Out: -20°C DB | Max | 4.00 | 1.800 | 2.22 |
| Heating Low Temp. In: 20°C DB/15°C WB Out: -25°C DB | Max | 3.50 | 1.700 | 2.06 |
| Heating Low Temp. In: 20°C DB/15°C WB Out: -30°C DB | Max | 2.80 | 1.470 | 1.90 |

**Cooling performance characteristic :**

| Outside | Min capacity | | | Nominal capacity | | | Max capacity | | |
|---|---|---|---|---|---|---|---|---|---|
| Temp | Capacity | Power | EER | Capacity | Power | EER | Capacity | Power | EER |
| (°C) | (kW) | (kW) | ( - ) | (kW) | (kW) | ( - ) | (kW) | (kW) | ( - ) |
| 20 | 1.31 | 0.20 | 6.43 | 4.17 | 0.67 | 6.26 | 6.20 | 1.21 | 5.13 |
| 21 | 1.30 | 0.21 | 6.24 | 4.13 | 0.68 | 6.08 | 6.13 | 1.23 | 4.98 |
| 22 | 1.28 | 0.21 | 6.07 | 4.08 | 0.69 | 5.90 | 6.07 | 1.25 | 4.84 |
| 23 | 1.27 | 0.22 | 5.90 | 4.04 | 0.70 | 5.74 | 6.00 | 1.28 | 4.71 |
| 24 | 1.26 | 0.22 | 5.73 | 3.99 | 0.72 | 5.58 | 5.93 | 1.30 | 4.57 |
| 25 | 1.24 | 0.22 | 5.57 | 3.95 | 0.73 | 5.42 | 5.87 | 1.32 | 4.45 |
| 26 | 1.23 | 0.23 | 5.42 | 3.90 | 0.74 | 5.27 | 5.80 | 1.34 | 4.32 |
| 27 | 1.21 | 0.23 | 5.27 | 3.86 | 0.75 | 5.13 | 5.73 | 1.36 | 4.21 |
| 28 | 1.20 | 0.23 | 5.13 | 3.81 | 0.76 | 4.99 | 5.67 | 1.39 | 4.09 |
| 29 | 1.18 | 0.24 | 4.99 | 3.77 | 0.78 | 4.85 | 5.60 | 1.41 | 3.98 |
| 30 | 1.17 | 0.24 | 4.85 | 3.72 | 0.79 | 4.72 | 5.53 | 1.43 | 3.87 |
| 31 | 1.16 | 0.25 | 4.72 | 3.68 | 0.80 | 4.59 | 5.47 | 1.45 | 3.77 |
| 32 | 1.14 | 0.25 | 4.59 | 3.63 | 0.81 | 4.47 | 5.40 | 1.47 | 3.66 |
| 33 | 1.13 | 0.25 | 4.47 | 3.59 | 0.83 | 4.35 | 5.33 | 1.50 | 3.57 |
| 34 | 1.11 | 0.26 | 4.35 | 3.54 | 0.84 | 4.23 | 5.27 | 1.52 | 3.47 |
| **35** | **1.10** | **0.26** | **4.23** | **3.50** | **0.85** | **4.12** | **5.20** | **1.54** | **3.38** |
| 36 | 1.09 | 0.26 | 4.12 | 3.46 | 0.86 | 4.01 | 5.13 | 1.56 | 3.29 |
| 37 | 1.07 | 0.27 | 4.01 | 3.41 | 0.87 | 3.90 | 5.04 | 1.57 | 3.20 |
| 38 | 1.06 | 0.27 | 3.90 | 3.37 | 0.89 | 3.80 | 4.92 | 1.57 | 3.13 |
| 39 | 1.04 | 0.27 | 3.80 | 3.32 | 0.90 | 3.69 | 4.81 | 1.57 | 3.06 |
| 40 | 1.03 | 0.28 | 3.69 | 3.28 | 0.91 | 3.60 | 4.70 | 1.57 | 2.99 |
| 41 | 1.02 | 0.28 | 3.60 | 3.23 | 0.92 | 3.50 | 4.59 | 1.57 | 2.92 |
| 42 | 1.00 | 0.29 | 3.50 | 3.19 | 0.94 | 3.41 | 4.49 | 1.57 | 2.85 |
| 43 | 0.99 | 0.29 | 3.41 | 3.14 | 0.95 | 3.31 | 4.38 | 1.57 | 2.79 |
| 44 | 0.97 | 0.29 | 3.31 | 3.10 | 0.96 | 3.23 | 4.28 | 1.57 | 2.72 |
| 45 | 0.96 | 0.30 | 3.23 | 3.05 | 0.97 | 3.14 | 3.98 | 1.46 | 2.72 |
| 46 | 0.94 | 0.30 | 3.14 | 3.01 | 0.98 | 3.05 | 3.88 | 1.46 | 2.65 |

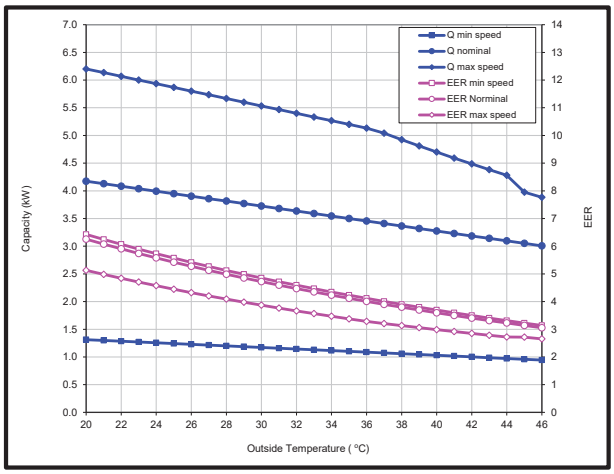


**Heating performance characteristic :**

| Outside | Min capacity | | | Nominal capacity | | | Max capacity | | |
|---|---|---|---|---|---|---|---|---|---|
| Temp | Capacity | Power | COP | Capacity | Power | COP | Capacity | Power | COP |
| (°C) | (kW) | (kW) | ( - ) | (kW) | (kW) | ( - ) | (kW) | (kW) | ( - ) |
| **-30** | **0.37** | **0.11** | **3.26** | **1.55** | **0.52** | **2.98** | **2.80** | **1.47** | **1.90** |
| -29 | 0.39 | 0.12 | 3.32 | 1.63 | 0.54 | 3.03 | 2.94 | 1.52 | 1.94 |
| -28 | 0.41 | 0.12 | 3.38 | 1.70 | 0.55 | 3.08 | 3.08 | 1.56 | 1.97 |
| -27 | 0.42 | 0.12 | 3.43 | 1.78 | 0.57 | 3.13 | 3.22 | 1.61 | 2.00 |
| -26 | 0.44 | 0.13 | 3.48 | 1.86 | 0.59 | 3.18 | 3.36 | 1.65 | 2.03 |
| **-25** | **0.46** | **0.13** | **3.52** | **1.94** | **0.60** | **3.22** | **3.50** | **1.70** | **2.06** |
| -24 | 0.47 | 0.13 | 3.58 | 1.99 | 0.61 | 3.27 | 3.60 | 1.72 | 2.09 |
| -23 | 0.49 | 0.13 | 3.64 | 2.05 | 0.62 | 3.32 | 3.70 | 1.74 | 2.13 |
| -22 | 0.50 | 0.14 | 3.70 | 2.10 | 0.62 | 3.38 | 3.80 | 1.76 | 2.16 |
| -21 | 0.51 | 0.14 | 3.75 | 2.16 | 0.63 | 3.43 | 3.90 | 1.78 | 2.19 |
| **-20** | **0.53** | **0.14** | **3.80** | **2.21** | **0.64** | **3.47** | **4.00** | **1.80** | **2.22** |
| -19 | 0.54 | 0.14 | 3.86 | 2.27 | 0.64 | 3.52 | 4.10 | 1.82 | 2.25 |
| -18 | 0.55 | 0.14 | 3.91 | 2.32 | 0.65 | 3.57 | 4.20 | 1.84 | 2.28 |
| -17 | 0.57 | 0.14 | 3.96 | 2.38 | 0.66 | 3.61 | 4.30 | 1.86 | 2.31 |
| -16 | 0.58 | 0.14 | 4.01 | 2.43 | 0.67 | 3.66 | 4.40 | 1.88 | 2.34 |
| **-15** | **0.59** | **0.15** | **4.06** | **2.49** | **0.67** | **3.70** | **4.50** | **1.90** | **2.37** |
| -14 | 0.61 | 0.15 | 4.06 | 2.55 | 0.69 | 3.71 | 4.60 | 1.94 | 2.37 |
| -13 | 0.62 | 0.15 | 4.06 | 2.60 | 0.70 | 3.71 | 4.70 | 1.98 | 2.37 |
| -12 | 0.63 | 0.16 | 4.07 | 2.66 | 0.72 | 3.71 | 4.80 | 2.02 | 2.38 |
| -11 | 0.65 | 0.16 | 4.07 | 2.71 | 0.73 | 3.72 | 4.90 | 2.06 | 2.38 |
| **-10** | **0.66** | **0.16** | **4.08** | **2.77** | **0.74** | **3.72** | **5.00** | **2.10** | **2.38** |
| -9 | 0.66 | 0.16 | 4.08 | 2.79 | 0.75 | 3.72 | 5.04 | 2.12 | 2.38 |
| -8 | 0.67 | 0.16 | 4.08 | 2.81 | 0.76 | 3.72 | 5.08 | 2.13 | 2.38 |
| -7 | 0.68 | 0.17 | 4.08 | 2.84 | 0.76 | 3.73 | 5.13 | 2.15 | 2.38 |
| -6 | 0.68 | 0.17 | 4.08 | 2.86 | 0.77 | 3.73 | 5.17 | 2.17 | 2.38 |
| -5 | 0.69 | 0.17 | 4.08 | 2.88 | 0.77 | 3.73 | 5.21 | 2.18 | 2.39 |
| -4 | 0.69 | 0.17 | 4.09 | 2.91 | 0.78 | 3.73 | 5.25 | 2.20 | 2.39 |
| -3 | 0.70 | 0.17 | 4.09 | 2.93 | 0.78 | 3.73 | 5.29 | 2.22 | 2.39 |
| -2 | 0.70 | 0.17 | 4.09 | 2.95 | 0.79 | 3.73 | 5.33 | 2.23 | 2.39 |
| -1 | 0.71 | 0.17 | 4.09 | 2.97 | 0.80 | 3.73 | 5.38 | 2.25 | 2.39 |
| 0 | 0.71 | 0.17 | 4.09 | 3.00 | 0.80 | 3.74 | 5.42 | 2.27 | 2.39 |
| 1 | 0.72 | 0.18 | 4.09 | 3.02 | 0.81 | 3.74 | 5.46 | 2.28 | 2.39 |
| **2** | **0.72** | **0.18** | **4.09** | **3.04** | **0.81** | **3.74** | **5.50** | **2.30** | **2.39** |
| 3 | 0.80 | 0.18 | 4.38 | 3.09 | 0.83 | 3.75 | 5.60 | 2.34 | 2.39 |
| 4 | 0.87 | 0.19 | 4.64 | 3.14 | 0.84 | 3.76 | 5.70 | 2.38 | 2.39 |
| 5 | 0.95 | 0.19 | 4.89 | 3.19 | 0.85 | 3.77 | 5.80 | 2.42 | 2.40 |
| 6 | 0.97 | 0.20 | 4.95 | 4.09 | 0.91 | 4.52 | 7.60 | 2.46 | 3.09 |
| **7** | **1.00** | **0.20** | **5.00** | **4.20** | **0.92** | **4.57** | **7.80** | **2.50** | **3.12** |
| 8 | 1.03 | 0.20 | 5.05 | 4.31 | 0.93 | 4.61 | 8.00 | 2.54 | 3.15 |
| 9 | 1.05 | 0.21 | 5.10 | 4.42 | 0.95 | 4.66 | 8.20 | 2.58 | 3.18 |
| 10 | 1.08 | 0.21 | 5.15 | 4.53 | 0.96 | 4.70 | 8.40 | 2.62 | 3.21 |
| 11 | 1.10 | 0.21 | 5.19 | 4.63 | 0.98 | 4.74 | 8.61 | 2.65 | 3.24 |
| 12 | 1.13 | 0.22 | 5.24 | 4.74 | 0.99 | 4.78 | 8.81 | 2.69 | 3.27 |
| 13 | 1.15 | 0.22 | 5.28 | 4.85 | 1.01 | 4.82 | 9.01 | 2.73 | 3.30 |
| 14 | 1.18 | 0.22 | 5.33 | 4.96 | 1.02 | 4.86 | 9.21 | 2.77 | 3.32 |
| 15 | 1.21 | 0.22 | 5.37 | 5.07 | 1.03 | 4.90 | 9.35 | 2.78 | 3.36 |
| 16 | 1.23 | 0.23 | 5.41 | 5.18 | 1.05 | 4.94 | 9.45 | 2.78 | 3.40 |
| 17 | 1.26 | 0.23 | 5.45 | 5.28 | 1.06 | 4.97 | 9.64 | 2.82 | 3.42 |
| 18 | 1.28 | 0.23 | 5.49 | 5.39 | 1.08 | 5.01 | 9.74 | 2.82 | 3.46 |
| 19 | 1.31 | 0.24 | 5.52 | 5.50 | 1.09 | 5.04 | 9.85 | 2.82 | 3.49 |
| 20 | 1.34 | 0.24 | 5.56 | 5.61 | 1.11 | 5.08 | 9.95 | 2.82 | 3.53 |
| 21 | 1.36 | 0.24 | 5.59 | 5.72 | 1.12 | 5.11 | 10.05 | 2.82 | 3.57 |
| 22 | 1.39 | 0.25 | 5.63 | 5.83 | 1.13 | 5.14 | 10.14 | 2.82 | 3.60 |
| 23 | 1.41 | 0.25 | 5.66 | 5.93 | 1.15 | 5.17 | 10.24 | 2.82 | 3.64 |
| 24 | 1.44 | 0.25 | 5.69 | 6.04 | 1.16 | 5.20 | 10.34 | 2.82 | 3.67 |

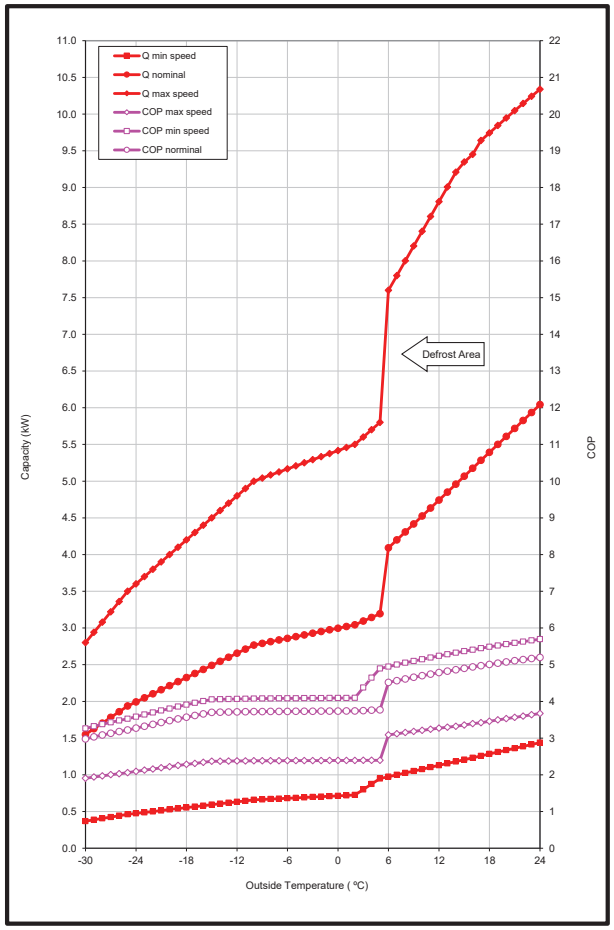

**Model : RAS-B50P2KVSG(B)-ND/RAS-50P2AVSG-ND**

**Product specification :**

| Condition | | Capacity (kW) | Power (kW) | EER/COP |
|---|---|---|---|---|
| Cooling JIS | Min | 1.00 | 0.32 | 3.13 |
| In: 27°C DB/19°C WB | Rated | 5.00 | 1.42 | 3.52 |
| Out: 35°C DB/24°C WB | Max | 6.50 | 2.27 | 2.86 |
| Heating JIS | Min | 1.00 | 0.28 | 3.57 |
| In: 20°C DB/15°C WB | Rated | 6.00 | 1.50 | 4.00 |
| Out: 7°C DB/6°C WB | Max | 8.70 | 2.70 | 3.22 |
| Heating Low Temp. In: 20°C DB/15°C WB Out: 2°C DB/1°C WB | Max | 7.20 | 2.80 | 2.57 |
| Heating Low Temp. In: 20°C DB/15°C WB Out: -10°C DB | Max | 6.80 | 2.70 | 2.52 |
| Heating Low Temp. In: 20°C DB/15°C WB Out: -15°C DB | Max | 6.50 | 2.65 | 2.45 |
| Heating Low Temp. In: 20°C DB/15°C WB Out: -20°C DB | Max | 5.80 | 2.600 | 2.23 |
| Heating Low Temp. In: 20°C DB/15°C WB Out: -25°C DB | Max | 5.10 | 2.550 | 2.00 |
| Heating Low Temp. In: 20°C DB/15°C WB Out: -30°C DB | Max | 4.40 | 2.520 | 1.75 |

**Cooling performance characteristic :**

| Outside | Min capacity | | | Nominal capacity | | | Max capacity | | |
|---|---|---|---|---|---|---|---|---|---|
| Temp | Capacity | Power | EER | Capacity | Power | EER | Capacity | Power | EER |
| (°C) | (kW) | (kW) | ( - ) | (kW) | (kW) | ( - ) | (kW) | (kW) | ( - ) |
| 20 | 1.19 | 0.25 | 4.75 | 5.96 | 1.11 | 5.35 | 7.75 | 1.78 | 4.35 |
| 21 | 1.18 | 0.26 | 4.61 | 5.90 | 1.14 | 5.20 | 7.67 | 1.81 | 4.23 |
| 22 | 1.17 | 0.26 | 4.48 | 5.83 | 1.16 | 5.05 | 7.58 | 1.85 | 4.11 |
| 23 | 1.15 | 0.26 | 4.36 | 5.77 | 1.18 | 4.91 | 7.50 | 1.88 | 3.99 |
| 24 | 1.14 | 0.27 | 4.23 | 5.71 | 1.20 | 4.77 | 7.42 | 1.91 | 3.88 |
| 25 | 1.13 | 0.27 | 4.12 | 5.64 | 1.22 | 4.64 | 7.33 | 1.94 | 3.77 |
| 26 | 1.12 | 0.28 | 4.00 | 5.58 | 1.24 | 4.51 | 7.25 | 1.98 | 3.67 |
| 27 | 1.10 | 0.28 | 3.89 | 5.51 | 1.26 | 4.39 | 7.17 | 2.01 | 3.57 |
| 28 | 1.09 | 0.29 | 3.79 | 5.45 | 1.28 | 4.27 | 7.08 | 2.04 | 3.47 |
| 29 | 1.08 | 0.29 | 3.68 | 5.39 | 1.30 | 4.15 | 7.00 | 2.07 | 3.37 |
| 30 | 1.06 | 0.30 | 3.58 | 5.32 | 1.32 | 4.04 | 6.92 | 2.11 | 3.28 |
| 31 | 1.05 | 0.30 | 3.49 | 5.26 | 1.34 | 3.93 | 6.83 | 2.14 | 3.19 |
| 32 | 1.04 | 0.31 | 3.39 | 5.19 | 1.36 | 3.82 | 6.75 | 2.17 | 3.11 |
| 33 | 1.03 | 0.31 | 3.30 | 5.13 | 1.38 | 3.72 | 6.67 | 2.20 | 3.02 |
| 34 | 1.01 | 0.32 | 3.21 | 5.06 | 1.40 | 3.62 | 6.58 | 2.24 | 2.94 |
| **35** | **1.00** | **0.32** | **3.13** | **5.00** | **1.42** | **3.52** | **6.50** | **2.27** | **2.86** |
| 36 | 0.99 | 0.32 | 3.04 | 4.94 | 1.44 | 3.43 | 6.42 | 2.30 | 2.79 |
| 37 | 0.97 | 0.33 | 2.96 | 4.87 | 1.46 | 3.34 | 6.33 | 2.34 | 2.71 |
| 38 | 0.96 | 0.33 | 2.88 | 4.81 | 1.48 | 3.25 | 6.25 | 2.37 | 2.64 |
| 39 | 0.95 | 0.34 | 2.80 | 4.74 | 1.50 | 3.16 | 6.17 | 2.40 | 2.57 |
| 40 | 0.94 | 0.34 | 2.73 | 4.68 | 1.52 | 3.07 | 6.08 | 2.43 | 2.50 |
| 41 | 0.92 | 0.35 | 2.66 | 4.62 | 1.54 | 2.99 | 6.00 | 2.47 | 2.43 |
| 42 | 0.91 | 0.35 | 2.58 | 4.55 | 1.56 | 2.91 | 5.92 | 2.50 | 2.37 |
| 43 | 0.90 | 0.36 | 2.52 | 4.49 | 1.58 | 2.83 | 5.83 | 2.53 | 2.31 |
| 44 | 0.88 | 0.36 | 2.45 | 4.42 | 1.60 | 2.76 | 5.75 | 2.56 | 2.24 |
| 45 | 0.87 | 0.37 | 2.38 | 4.36 | 1.62 | 2.68 | 5.67 | 2.60 | 2.18 |
| 46 | 0.86 | 0.37 | 2.32 | 4.29 | 1.64 | 2.61 | 5.58 | 2.63 | 2.12 |

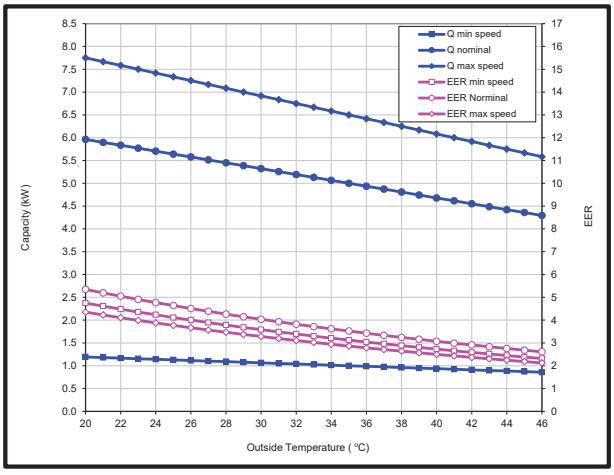


**Heating performance characteristic :**

| Outside | Min capacity | | | Nominal capacity | | | Max capacity | | |
|---|---|---|---|---|---|---|---|---|---|
| Temp | Capacity | Power | COP | Capacity | Power | COP | Capacity | Power | COP |
| (°C) | (kW) | (kW) | ( - ) | (kW) | (kW) | ( - ) | (kW) | (kW) | ( - ) |
| -30 | 0.44 | 0.22 | 1.99 | 2.66 | 1.19 | 2.22 | 4.40 | 2.52 | 1.75 |
| -29 | 0.46 | 0.22 | 2.04 | 2.74 | 1.20 | 2.29 | 4.54 | 2.53 | 1.80 |
| -28 | 0.47 | 0.22 | 2.10 | 2.83 | 1.20 | 2.35 | 4.68 | 2.53 | 1.85 |
| -27 | 0.49 | 0.22 | 2.16 | 2.91 | 1.20 | 2.42 | 4.82 | 2.54 | 1.90 |
| -26 | 0.50 | 0.23 | 2.22 | 3.00 | 1.21 | 2.48 | 4.96 | 2.54 | 1.95 |
| -25 | 0.51 | 0.23 | 2.27 | 3.08 | 1.21 | 2.55 | 5.10 | 2.55 | 2.00 |
| -24 | 0.53 | 0.23 | 2.33 | 3.16 | 1.21 | 2.61 | 5.24 | 2.56 | 2.05 |
| -23 | 0.54 | 0.23 | 2.38 | 3.25 | 1.22 | 2.67 | 5.38 | 2.57 | 2.09 |
| -22 | 0.56 | 0.23 | 2.43 | 3.33 | 1.22 | 2.73 | 5.52 | 2.58 | 2.14 |
| -21 | 0.57 | 0.23 | 2.49 | 3.42 | 1.23 | 2.78 | 5.66 | 2.59 | 2.19 |
| -20 | 0.58 | 0.23 | 2.54 | 3.50 | 1.23 | 2.84 | 5.80 | 2.60 | 2.23 |
| -19 | 0.60 | 0.23 | 2.59 | 3.59 | 1.24 | 2.90 | 5.94 | 2.61 | 2.28 |
| -18 | 0.61 | 0.23 | 2.64 | 3.67 | 1.24 | 2.96 | 6.08 | 2.62 | 2.32 |
| -17 | 0.63 | 0.23 | 2.69 | 3.76 | 1.25 | 3.01 | 6.22 | 2.63 | 2.37 |
| -16 | 0.64 | 0.23 | 2.74 | 3.84 | 1.25 | 3.07 | 6.36 | 2.64 | 2.41 |
| -15 | 0.65 | 0.23 | 2.79 | 3.93 | 1.26 | 3.12 | 6.50 | 2.65 | 2.45 |
| -14 | 0.66 | 0.24 | 2.80 | 3.96 | 1.26 | 3.14 | 6.56 | 2.66 | 2.47 |
| -13 | 0.67 | 0.24 | 2.82 | 4.00 | 1.27 | 3.16 | 6.62 | 2.67 | 2.48 |
| -12 | 0.67 | 0.24 | 2.83 | 4.03 | 1.27 | 3.17 | 6.68 | 2.68 | 2.49 |
| -11 | 0.68 | 0.24 | 2.85 | 4.07 | 1.28 | 3.19 | 6.74 | 2.69 | 2.51 |
| -10 | 0.68 | 0.24 | 2.86 | 4.11 | 1.28 | 3.21 | 6.80 | 2.70 | 2.52 |
| -9 | 0.69 | 0.24 | 2.87 | 4.13 | 1.28 | 3.21 | 6.83 | 2.71 | 2.52 |
| -8 | 0.69 | 0.24 | 2.87 | 4.15 | 1.29 | 3.22 | 6.87 | 2.72 | 2.53 |
| -7 | 0.69 | 0.24 | 2.88 | 4.17 | 1.29 | 3.23 | 6.90 | 2.73 | 2.53 |
| -6 | 0.70 | 0.24 | 2.88 | 4.19 | 1.30 | 3.23 | 6.93 | 2.73 | 2.54 |
| -5 | 0.70 | 0.24 | 2.89 | 4.21 | 1.30 | 3.24 | 6.97 | 2.74 | 2.54 |
| -4 | 0.70 | 0.24 | 2.89 | 4.23 | 1.30 | 3.24 | 7.00 | 2.75 | 2.55 |
| -3 | 0.71 | 0.24 | 2.90 | 4.25 | 1.31 | 3.25 | 7.03 | 2.76 | 2.55 |
| -2 | 0.71 | 0.24 | 2.90 | 4.27 | 1.31 | 3.25 | 7.07 | 2.77 | 2.55 |
| -1 | 0.71 | 0.25 | 2.91 | 4.29 | 1.32 | 3.26 | 7.10 | 2.78 | 2.56 |
| 0 | 0.72 | 0.25 | 2.91 | 4.31 | 1.32 | 3.26 | 7.13 | 2.78 | 2.56 |
| 1 | 0.72 | 0.25 | 2.92 | 4.33 | 1.32 | 3.27 | 7.17 | 2.79 | 2.57 |
| **2** | **0.72** | **0.25** | **2.92** | **4.35** | **1.33** | **3.28** | **7.20** | **2.80** | **2.57** |
| 3 | 0.80 | 0.26 | 3.13 | 4.42 | 1.35 | 3.28 | 7.26 | 2.77 | 2.62 |
| 4 | 0.87 | 0.26 | 3.32 | 4.49 | 1.36 | 3.29 | 7.32 | 2.73 | 2.68 |
| 5 | 0.95 | 0.27 | 3.50 | 4.56 | 1.38 | 3.30 | 7.38 | 2.70 | 2.73 |
| 6 | 0.97 | 0.28 | 3.53 | 5.85 | 1.48 | 3.96 | 8.48 | 2.66 | 3.19 |
| **7** | **1.00** | **0.28** | **3.57** | **6.00** | **1.50** | **4.00** | **8.70** | **2.70** | **3.22** |
| 8 | 1.03 | 0.28 | 3.61 | 6.15 | 1.52 | 4.04 | 8.92 | 2.74 | 3.25 |
| 9 | 1.05 | 0.29 | 3.64 | 6.31 | 1.55 | 4.08 | 9.15 | 2.78 | 3.29 |
| 10 | 1.08 | 0.29 | 3.68 | 6.46 | 1.57 | 4.12 | 9.37 | 2.83 | 3.32 |
| 11 | 1.10 | 0.30 | 3.71 | 6.62 | 1.59 | 4.16 | 9.60 | 2.87 | 3.35 |
| 12 | 1.13 | 0.30 | 3.74 | 6.77 | 1.62 | 4.19 | 9.82 | 2.91 | 3.38 |
| 13 | 1.15 | 0.31 | 3.77 | 6.93 | 1.64 | 4.23 | 10.05 | 2.95 | 3.40 |
| 14 | 1.18 | 0.31 | 3.80 | 7.08 | 1.66 | 4.26 | 10.27 | 2.99 | 3.43 |
| 15 | 1.21 | 0.31 | 3.83 | 7.24 | 1.69 | 4.29 | 10.50 | 3.03 | 3.46 |
| 16 | 1.23 | 0.32 | 3.86 | 7.39 | 1.71 | 4.33 | 10.72 | 3.08 | 3.48 |
| 17 | 1.26 | 0.32 | 3.89 | 7.55 | 1.73 | 4.36 | 10.95 | 3.12 | 3.51 |
| 18 | 1.28 | 0.33 | 3.92 | 7.70 | 1.76 | 4.39 | 11.17 | 3.16 | 3.53 |
| 19 | 1.31 | 0.33 | 3.94 | 7.86 | 1.78 | 4.42 | 11.39 | 3.20 | 3.56 |
| 20 | 1.34 | 0.34 | 3.97 | 8.01 | 1.80 | 4.45 | 11.62 | 3.24 | 3.58 |
| 21 | 1.36 | 0.34 | 4.00 | 8.17 | 1.83 | 4.48 | 11.84 | 3.29 | 3.60 |
| 22 | 1.39 | 0.35 | 4.02 | 8.32 | 1.85 | 4.50 | 12.07 | 3.33 | 3.63 |
| 23 | 1.41 | 0.35 | 4.04 | 8.48 | 1.87 | 4.53 | 12.29 | 3.37 | 3.65 |
| 24 | 1.44 | 0.35 | 4.07 | 8.63 | 1.89 | 4.56 | 12.52 | 3.41 | 3.67 |

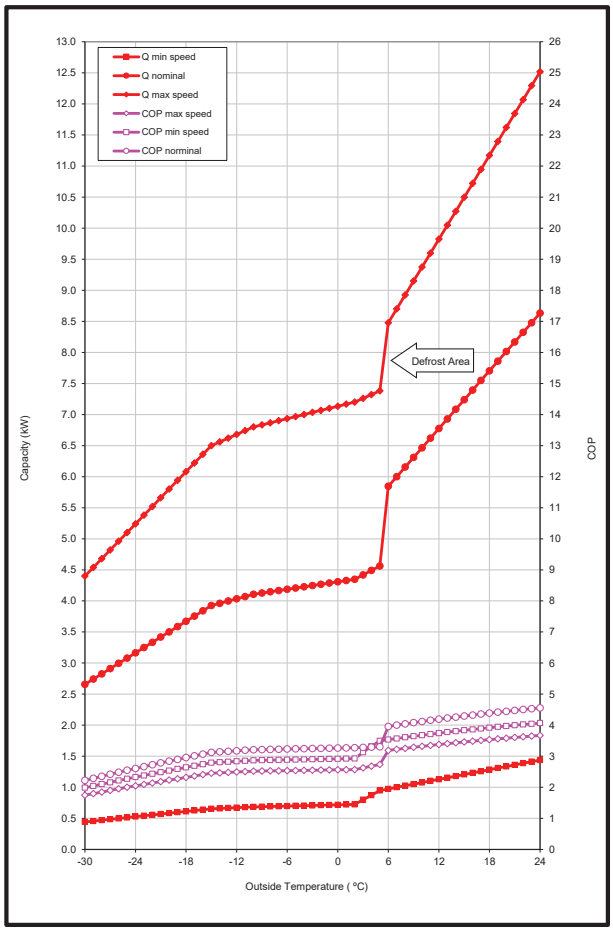

# 11. Accessories

Standard RC : WH-UE06UE for White IDU

| Appearance | Remote control features |
|---|---|
| 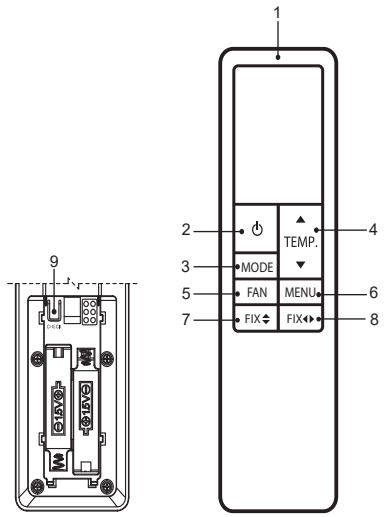 | 1 Infrared signal emitter<br>2 Start/Stop button<br>3 Mode select button<br>4 Temperature button<br>5 Fan speed button<br>6 Menu select button<br>7 Set louver Up-Down button<br>8 Set louver Left-Right button<br>9 Check button*<br>*Check button under battery cover |

Standard RC : WH-UE05UE for Black IDU

| Appearance | Remote control features |
|---|---|
| 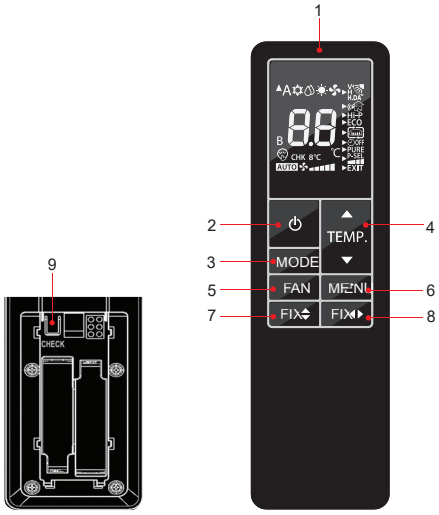 | 1 Infrared signal emitter<br>2 Start/Stop button<br>3 Mode select button<br>4 Temperature button<br>5 Fan speed button<br>6 Menu select button<br>7 Set louver Up-Down button<br>8 Set louver Left-Right button<br>9 Check button*<br>*Check button under battery cover |

## Toshiba Home AC Control application support

iOS : 9.0 or later.

Android : Version 5.0 or later.

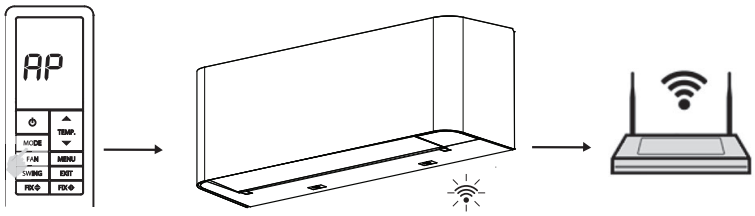


Active Wireless adapter by Remote controller.

## Toshiba Home AC Control application

### Home screen

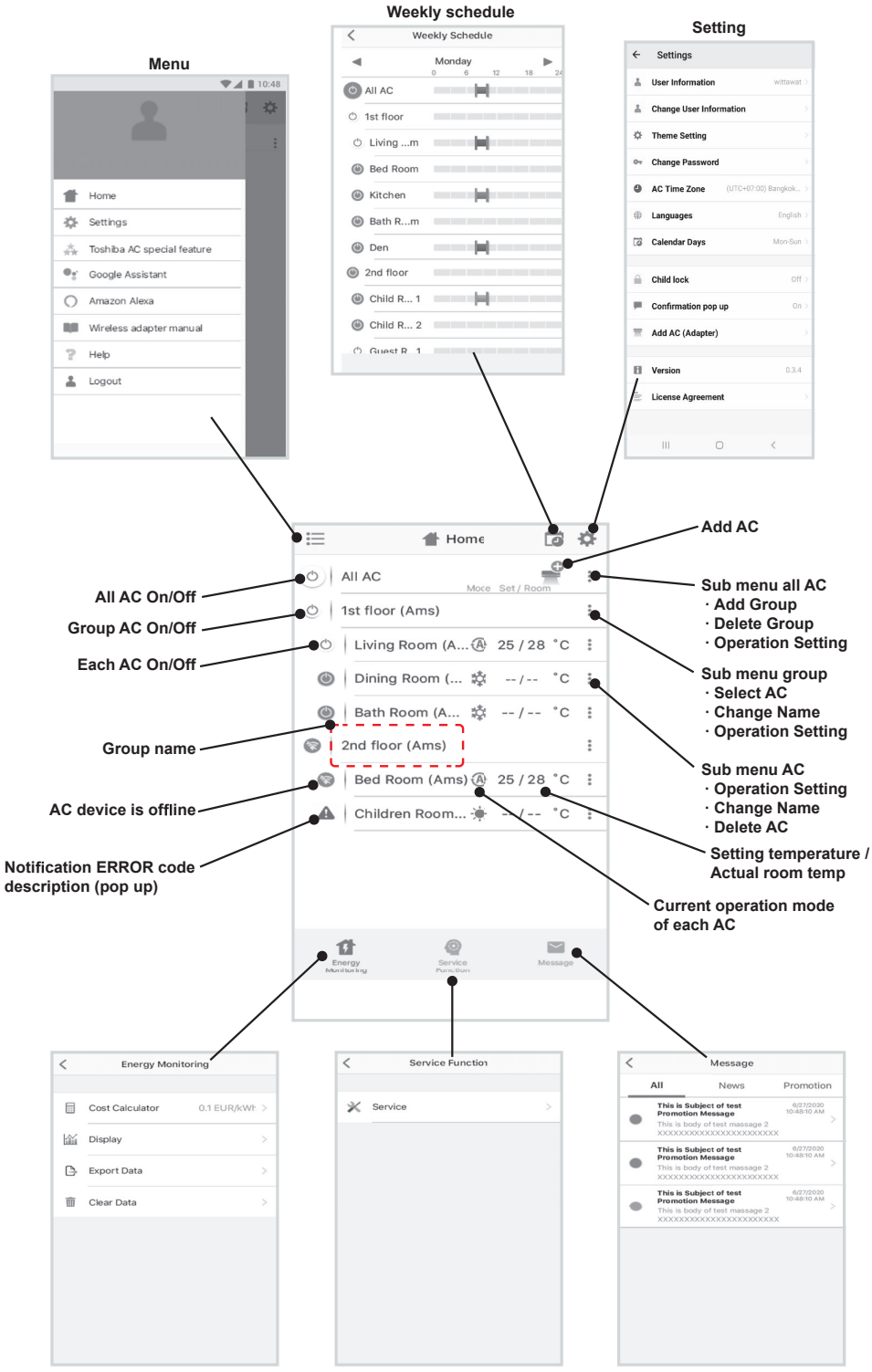

## Setting in operation mode

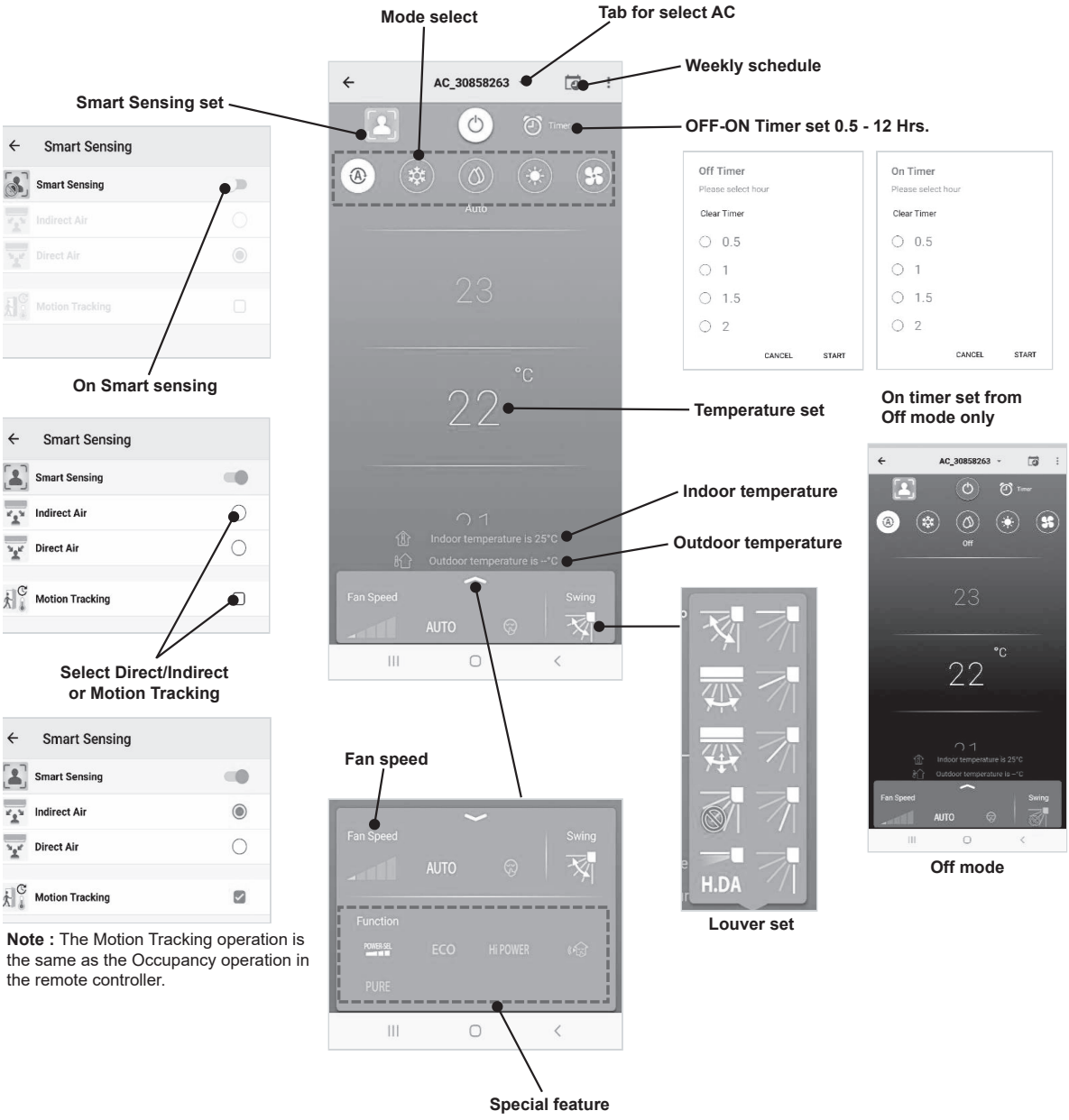


## Summary Features

| | Model code | Strong Defrost | On demand Defrost | Hi power | Silent CDU | Power select | Eco logic | Fix vertical | Swing vertical | Fix Horizontal | Swing Horizontal | 3D airflow (Swing V&H) | HADA care | Preset |
|---|---|---|---|---|---|---|---|---|---|---|---|---|---|---|
| Standard RC | WH-UE05UE WH-UE06UE | ✓ | ✓ | ✓ | ✓ | ✓ | ✓ | ✓ | ✓ | ✓ | ✓ | ✓ | ✓ | X |
| Accessory RC | RB-RXS33-E | X | ✓ | ✓ | ✓ | ✓ | ✓ | ✓ | ✓ | X | ✓ | ✓ | X | ✓ |
| Wi-Fi | Built-In | ✓ | ✓ | ✓ | ✓ | ✓ | ✓ | ✓ | ✓ | ✓ | ✓ | ✓ | ✓ | X |

| | Model code | Fan speed | Quiet FCU | 8° C (Heating mode) | Fire place | Off timer (0.5, 1-12hrs.) | 24 Hrs. on-off timer | Weekly timer | FCU led Dim | Comfort sleep | Backlight display | Luminous button | Wired connectable RC |
|---|---|---|---|---|---|---|---|---|---|---|---|---|---|
| Standard RC | WH-UE05UE WH-UE06UE | ✓ | ✓ | ✓5-30°C | ✓ | ✓ | X | X | ✓ | X | ✓ | ✓ | X |
| Accessory RC | RB-RXS33-E | ✓ | ✓ | ✓ | ✓ | X | ✓ | ✓ | ✓ | ✓ | ✓ | ✓ | ✓ |
| Wi-Fi | Built-In | ✓ | ✓ | ✓ | ✓ | ✓ | X | ✓ | X | X | | | |

**CARRIER AIR CONDITIONING (THAILAND) CO.,LTD.**

144/9 Moo 5, Bangkadi Industrial Park, Tivanon Road, Tambol Bangkadi,
Amphur Muang, Pathumthani 12000, Thailand
Copyright © 2024 CARRIER AIR CONDITIONING (THAILAND) CO.,LTD.All Rights Reserved

Notice : Carrier is committed to continuously improving its prod ucts to ensure the highest quality and reliability standard, and to meet local regulations and market requirements. All features and specifications are subject to change without prior notice.

Revision : 01 / 260924